MAGNETIC LIFTING

LIFT • TRANSPORT • HOLD

Flaig Magnetsysteme GmbH from Hardt in the Black Forest has been manufacturing magnets for lifting, clamping and holding. We manufacture a wide range of standard and special solutions of all kinds on modern machines. Our experience and our innovative spirit make us a competent partner for magnetic applications. applications.

Flaig Magnetsysteme - From experience and innovation

Lifting Magnets

Lifting magnets are the perfect load handling device for anyone who needs to work quickly and safely. A multitude of advantages speak for their use, wherever loads have to be held without a handle. In material storage, transportation, fixture construction and when loading and unloading machines.

We offer a wide range of different designs and technical concepts, from the broadly applicable

standard product to the individually tailored for your special application.

When selecting lifting magnets, please refer to the technical information starting on page 52 in the catalog.

All holding force data have been determined in accordance with the test method for lifting magnets in EN 13155, on a test plate of low carbon steel, suitable thickness and flatness less than 0.1/500 mm.

We will be pleased to advise you at any time on special handling problems.

Page 5 - 12

Permanent Lifting Magnets

Page 13 - 14

Horizontal-Vertical Systems

Page 16 - 18

Permanent Magnetic Trusses

Page 22 - 37

Electro-Permanent Lifting Magnets

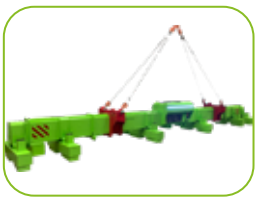

Page 38 - 45

Electro-Permanent Magnetic Trusses

Page 46 - 49

FXE-M Modular Electro-Permanent Lifting Magnets

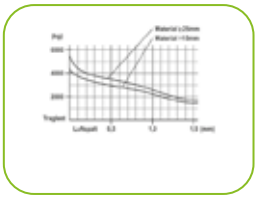

Page 52 - 57

Technical Basics,
Selection Guide Lifting Magnets,
Load Tables FX

Page 58 - 59

MBX Magnetic Clamping Blocks

FX-Lift is the product line developed according to the needs of the users

Permanent Lifting Magnets

The FX base unit is suitable for flat and round material

FX-P - when it comes to sheets less than 12mm thick and tubes - the right device for the laser cutting machine

FX-C - especially suitable for rings and sleeves

FX-LT - Lightweight truss with 2-strand chain for sheets and workpieces with centric cutout

FX-R - suitable if you need to lift mostly round and/or hot material

FX-VV - especially suitable for profiles, beams and hot parts 150°C/100%.

FX-HV - specially designed for horizontal and vertical transport

FX-KT - especially for the transport of workpieces with central cut-out

Electro-Permanent Lifting Magnets

FXE-L 50+ - long design with reinforced magnet system for tubes, beams and strips

FXE-100 - for heavy plates, forgings, cast ingots

FXE-HD - for heavy workpieces from 7.2t

FXE-M - modular system for the assembly of trusses or for pick & place systems

FXE 50 - for sheets from 4mm and workpieces with small air gap

FXE 80 - for lifting sheets from 8mm; for solid parts with medium air gap

FXE-R - for round and flat material also in layers

FXE-T - Electro permanent magnetic truss for sheet metal

Digital & Immortal

FX Refund & FX Green Dot

The FX series is the world's best lifting magnet program when it comes to technology, quality and completeness. To keep it that way, we are consistently developing our products and are now making magnetic lifting sustainable and digital.

Circular economy

100% Recyclable
Each device comes with a defined FX Refund value, which is refunded by us when it is sent in for recycling.

FX Green Dot

FX lifting magnets are equipped with the Green Dot, an NFC chip that provides the user with all important information.

Manufacturer guarantee

5 year guarantee on all FX lifting magnets

CE & S-class compliant

All FX lifting magnets are standard-compliant in accordance with the current EN 13155:2022

Corrosion protection

FX lifting magnets are protected against corrosion by nickel-plated surfaces

Exclusive Benefits of the FX-Series

FX - Economically the right decision

- Made in Germany
- Standard-compliant and tested
  CE/EN 13155/MRL 2006/42 EWG
- Product liability insurance with a German insurance company
- Multilingual Documentation
- Environmentally friendly and future-proof by higher
  Power with lower SE Magnet consumption
- 5 years Warranty
- Safety factor 3,5
- supply of spare parts guaranteed for 10 years
- CAD Data available
- Facilitated document management for work safety

FX - Technically the right decision

- 100% nickel
- High Energy half-shell Magnets
- actuator travel of only 90°
- large forged lifting eye (SF5)
- great performance in a compact design
- short loading- and unloading times
- no mechanical impairment of
  workpiece
- very massive shift shaft
- recoilless hand operation
- suitable for flat and round materials
- increased safety via simple operation
- **2006/42 EWG / S-Class 8** = >2.000.000 Load cycles
  acc. to EN 13001

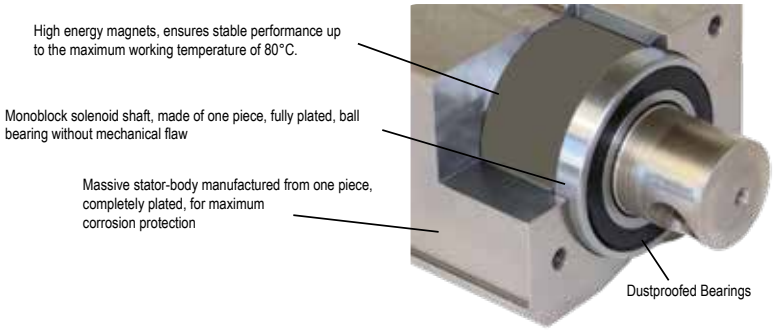

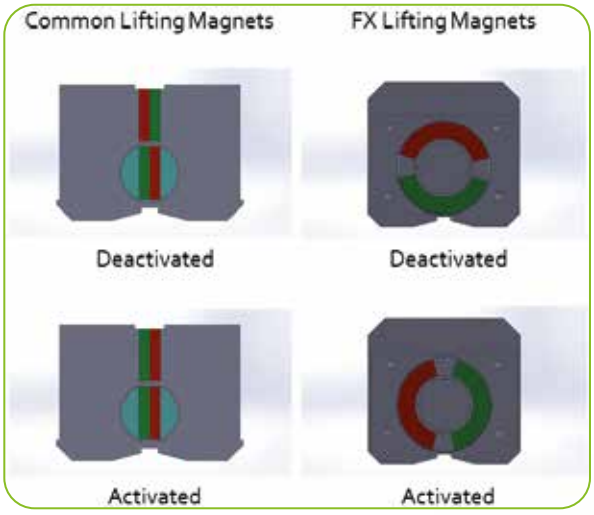

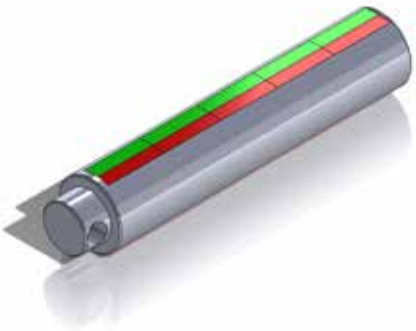

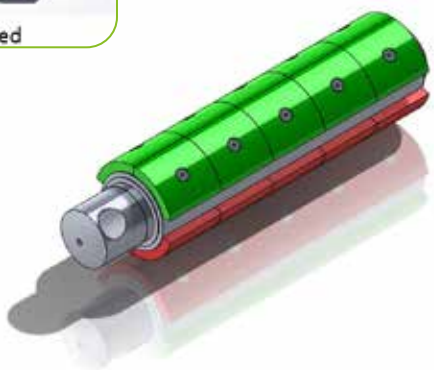

Common Lifting Magnets
Recessed or welded shifter shaft with
Built-in magnets, 180° theoretical switching travel,
Weakened or welded shaft, 3 air gaps

FX Lifting Magnets
Massive switching shaft with mounted magnets,
90° theoretical switching travel, extremely robust,
Only one air gap

FX Universal Permanent Lifting Magnets

FX lifting magnets in standard design convince by their wide field of application. The FX achieves good results with large air gaps as well as with thin flat and round materials with a compact design and low weight. The device is characterized by great robustness and a very good price/performance ratio.

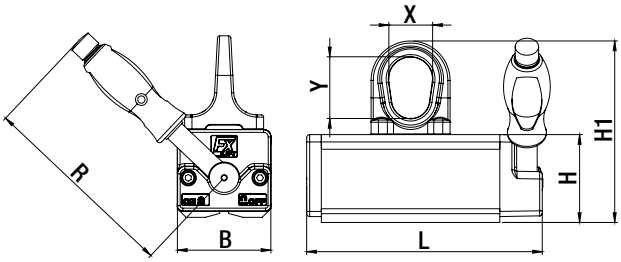

Model	Item-Nr.	WLL (kg) flat	WLL (kg) round	WLL from (mm)	Dimensions (mm) L	Dimensions (mm) W	Weight (kg)	FX Refund Value*	List Price
FX-150	1101 0150	150 kg	Ø50-200 mm 75 kg	8	161	64	3,6	60,-	398,-
FX-300	1101 0300	300 kg	Ø50-300 mm 150 kg	15	205	87	8,4	120,-	548,-
FX-600	1101 0600	600 kg	Ø80-400 mm 300 kg	20	288	112	19	200,-	858,-
FX-800	1101 0800	800 kg	Ø80-400 mm 400 kg	20	348	112	23	220,-	998,-
FX-1000	1101 1000	1000 kg	Ø100-450 mm 500 kg	25	361	152	42	280,-	1.298,-
FX-1500	1101 1500	1500 kg	Ø100-450 mm 750 kg	25	485	152	61	400,-	1.948,-
FX-2000	1101 2000	2000 kg	Ø120-600 mm 1000 kg	50	472	228	115	600,-	2.698,-
FX-3000	1101 3000	3000 kg	Ø250-600 mm 1500 kg	50	648	228	166	750,-	3.998,-

*Material value that we will refund if sent in for recycling • Safety factor 3,5/Test method EN 13155:2022
max. Operation temperature 80°C • Load charts and Safety from Page 52

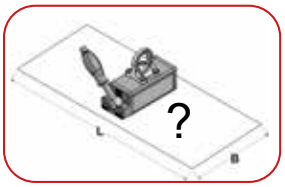

Load Charts and Safety from Page 52

FX-R Permanent Lifting Magnets especially suitable for round material

FX-R is the lifting magnet series for round material handling. The deep shallow-angled prism ensures safe positioning on the load and directs the magnetic field deep into the material. The magnet system can be switched well in the entire diameter range and does not recoil, shearing of the load due to twisting is prevented by the overlapping prism.Flat material, even with low material thickness, is no problem for the FX-R. With hot workpieces, the deep prism protects the magnetic core from overheating.

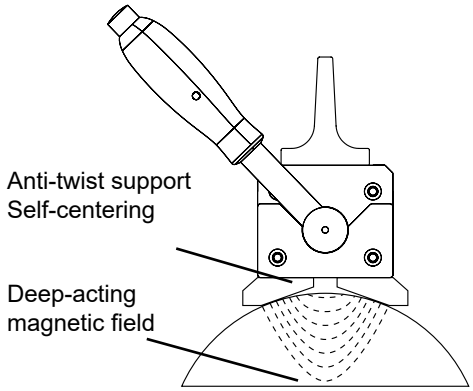

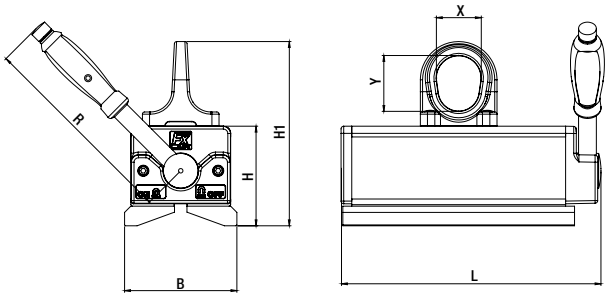

Model	Item-Nr.	WLL (kg) flat	WLL (kg) round	WLL from (mm)	Dimensions (mm) L	Dimensions (mm) W	Weight (kg)	FX Refund Value*	List Price
FX-R100	1101 0101	100	Ø 25-150 mm 100 kg	8	161	70	4	60,-	428,-
FX-R225	1101 0221	225	Ø 50-205 mm 225 kg	10	205	98	9,5	120,-	638,-
FX-R450	1101 0451	450	Ø 50-270 mm 450 kg	20	288	126	22	200,-	1.048,-
FX-R750	1101 0751	750	Ø 70-370 mm 750 kg	20	361	170	49	280,-	1.698,-
FX-R1200	1101 1201	1200	Ø 120-560 mm 1200 kg	40	472	248	127	600,-	3.498,-
FX-R1800	1101 1801	1800	Ø 120-560 mm 1800 kg	40	648	248	182	750,-	4.598,-

*Material value that we will refund if sent in for recycling • Safety factor 3,5/Test method EN 13155:2022
max. Operation temperature 80°C • Load charts and Safety from Page 52

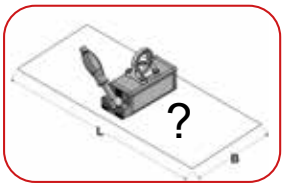

Load Charts and Safety from Page 52

FX-P Permanent lifting magnets especially for thin sheets and tubes

FX-P is the lifting magnet series for professional lifting and moving of thinner sheets, tubes and bars. The special magnet configuration in combination with the prismatic pole of the FX-P ensures maximum flux density at low material thicknesses. The FX-P is easy to position and operate on round material.

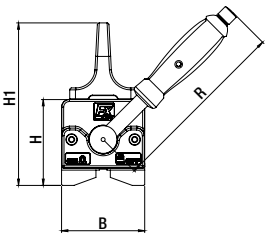

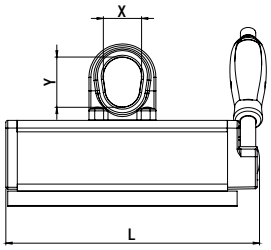

for thin sheet

Model	Max. Load capacity at sheets and 4-edge pipes							Pipes and rods	
	3mm	4mm	6mm	8mm	10mm	15mm	LxB max.	Ø kg	L Ømm
FX-P170	50	80	120	170	170	170	2000x1250	150	30-105
FX-P330	70	100	160	300	330	330	2500x1250	300	40-160
FX-P650	100	160	200	450	530	650	3000x1500	550	60-210

Model	Item-Nr.	WLL (kg) flat	WLL (kg) round	WLL from (mm)	Dim. (mm) L	Dim. (mm) W	Weight (kg)	FX Refund Value*	List Price
FX-P170	1101 0172	170 kg	Ø 30-105 mm 150 kg	8	195	64	5,1	80,-	498,-
FX-P330	1101 0332	330 kg	Ø 40-160 mm 300 kg	10	265	87	12,4	140,-	748,-
FX-P650	1101 0652	650 kg	Ø 60-210 mm 550 kg	20	352	112	26	220,-	1.098,-

*Material value that we will refund if sent in for recycling • Safety factor 3,5/Test method EN 13155:2022
max. Operation temperature 80°C • Load charts and Safety from Page 52

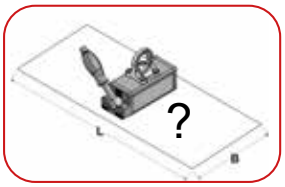

Load Charts and Safety from Page 52

FX-VV Permanent lifting magnets with 90° double prism for beams and profiles

FX-VV are perfect for metal construction. They have a long, narrow design for picking up beams and profiles - even on the inner web of the beam - and achieve their maximum holding force even with comparatively low material thickness, so that even thin sheets can be lifted safely. Thanks to the 90° double prism, angle profiles can now be picked up inside and outside or components can also be turned.

The FX-VV, like all FX models, has a completely nickel-plated magnet body and delivers very good test results, even with rough surfaces. The FX-VV also has a stable, smooth-running single-hand control.

150°C/100%

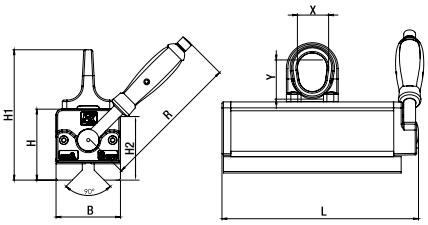

Model	Item-Nr.	WLL (kg) flat	round	90° inside	90° outside	WLL from (mm)	Dim. (mm) L	W	Weight (kg)	FX Refund Value*	List Price
FX-VV200	1101 0204	200 kg	Ø 20-50 mm 100 kg	100 kg	120 kg	10	195	64	5,5	80,-	498,-
FX-VV400	1101 0404	400 kg	Ø 25-60 mm 200 kg	200 kg	250 kg	15	265	87	13	140,-	778,-
FX-VV800	1101 0804	800 kg	Ø 35-75 mm 300 kg	300 kg	400 kg	20	352	112	28	220,-	1.168,-

*Material value that we will refund if sent in for recycling • Safety factor 3,5/Test method EN 13155:2022
max. Operation temperature 150°C • Load charts and Safety from Page 52

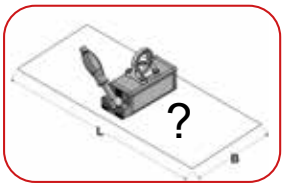

Load Charts and Safety from Page 52

FX-C Permanent lifting magnets especially for rings and sleeves

FX-C lifting magnets have a round, multi-pole clamping surface, designed for lifting rings, sleeves, bearing housings, flange plates and similar workpieces.
The load specification applies to full-surface contact with workpieces covering D inside to D outside (see table of dimensions); for workpieces with a smaller contact surface, a maximum workpiece weight of 3.5 kg per cm² of clamping surface can be roughly calculated. For series workpieces, a documented test should then confirm the safety factor of 3.

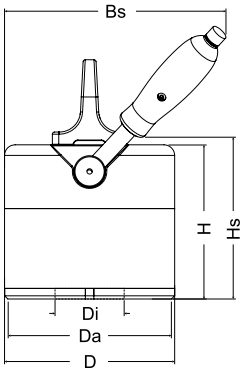

Model	Item Nr.	Dimensions (mm)					WLL from (mm)	WLL (kg)	WLL per cm² contact surface (kg)	Weight (kg)
		D	Da-Di	H	Hs	Bs				
FX-C 175	1101 0177	120	114-40	130	138	185	10	175	3,5	7,5
FX-C 250	1101 0257	160	152-65	145	153	210	12	250	3,5	15
FX-C 450	1101 0457	250	240-100	155	168	275	15	450	3,5	35

FX-Pneumatic Permanent Lifting Magnets with Pneumatic Switching

FX Pneumatic, designed for use with air-operated hoists, is pneumatically activated and deactivated. Each model also has an emergency release, so you retain full control at all times.

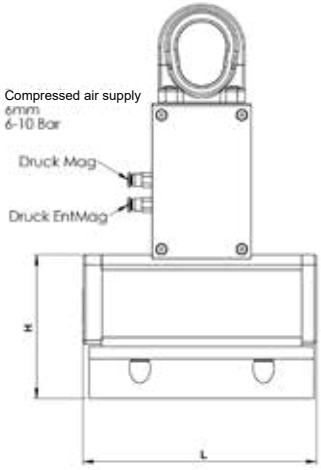

Model	Item-Nr.	WLL (kg) flat	WLL (kg) round	WLL from (mm)	Dimensions (mm) L	B	H	H1	R	X/Y	Weight (kg)
FX-R100 Pneumatic	1101 0109	80 kg	Ø 25-150 mm 80 kg	8	195	64	241	311	134	30/42	5,5
FX-R225 Pneumatic	1101 0229	225 kg	Ø 50-205 mm 225 kg	10	265	87	295	376	188	42/53	13
FX-R450 Pneumatic	1101 0459	450 kg	Ø 50-270 mm 450 kg	20	352	112	324	410	228	51/62	28
Safety factor 3,5/Test method EN 13155:2022 max. Operation temperature 80°C											

FX-VV HOT Permanent lifting magnets for hot workpieces up to max 300°C

FX-VV HOT for hot parts. A special permanent magnet system allows working temperatures of up to 300°C. Ideal for moving heated tools and dies, or heat-treated workpieces. The maximum continuous working temperature is 250°C - in peaks up to max. 5 minutes at 300°C.

250°C/100%

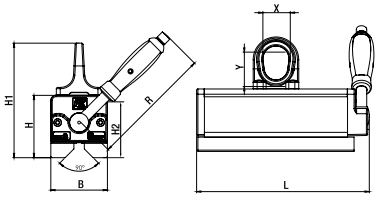

Model	Item-Nr.	WLL (kg) flat	WLL (kg) round	WLL (kg) 90°	WLL from (mm)	Dimensions (mm) L	B	H	H1	R	X/Y	Weight (kg)
FX-VV150 HOT	1101 0155	150 kg	Ø 20-50 mm 75 kg	90 kg	10	195	64	77	141	134	30/42	5,5
FX-VV300 HOT	1101 0305	300 kg	Ø 25-60 mm 150 kg	180 kg	15	265	87	96	176	188	42/53	13
FX-VV600 HOT	1101 0605	600 kg	Ø 35-75 mm 300 kg	360 kg	20	352	112	115	210	228	51/62	28
Safety factor 3,5/Test method EN 13155:2022 max. Operation temperature 300°C												

FX-HV Horizontal-Vertical systems

The FX-HV Horizontal Vertical System meets almost every need with its wide range of adjustment options. Overall height and center of gravity can be adjusted via plug-in bolts. Likewise, the unit can be used for up to 20% of its rated load without the undergripping supports. The support bolts are positioned in such a way that upright circular blanks can be attached, which is often required at the saw, for example.

Likewise, horizontal discs and sheets can be set up. For horizontal transport, the system has a crane eye on the back. The steel construction is completely powder-coated, and the stable FX load lifting magnet ensures maximum safety.
Special dimensions are available on request.

FX-HV150

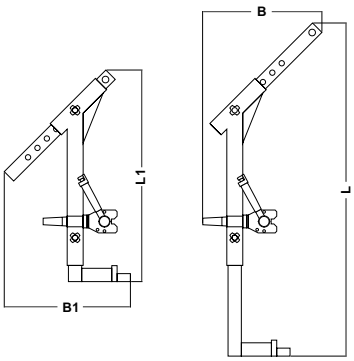

Model	Item-Nr.	Slices-Ø (mm)	Flat material Dimensions (mm)	WLL with stop (kg)	WLL without stop (kg)	Dimensions (mm) L	B	L1	B1	Weight (kg)
FX-HV 150	1103 0152	150 - 420	1000 x 420	150	30	680	104	680	220	18
FX-HV 200	1103 0202	250 - 750	2000 x 750	200	40	1000	400	715	390	24
FX-HV 400	1103 0402	400 - 1000	2000 x 1000	400	80	1250	450	795	475	31
FX-HV 800	1103 0802	500 - 1200	2500 x 1250	800	160	1500	500	1040	520	70
FX-HV 2000	1103 2002	500 - 1200	2500 x 1250	2000	400	1800	600	1200	650	243
FX-HV 3000	1103 3002	500 - 1200	2500 x 1250	3000	600	1800	600	1200	650	294
max. Operation temperature 80°C • Weight incl. Magnet										

FX-HVS Horizontal Vertical Systems with Swivel Function

FX-HVS makes it possible to swing suspended loads, while the spring-loaded suspension system compensates for shifts in the center of gravity so that the load can be moved in horizontal and vertical positions.

Application video here

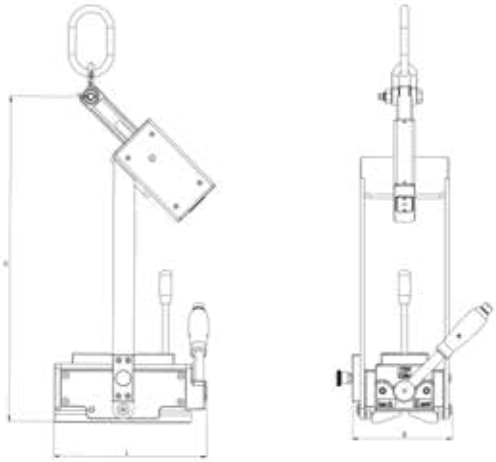

Application video here

Model	Item Nr.	Dimensions (mm)			WLL cylindrical loads horizontal/vertical (kg)	Weight (kg)
		L	W	H		
FX-HVS R225	1103 0221	207	160	557	135/45	30
FX-HVS 300	1103 0300	657	207	389	120/120	35
FX-HVS R450	1103 0451	292	212	624	270/90	43
Further models on request						

Towing Eye for FX Lifting Magnets

Special option towing eye for FX lifting magnets. For vertical transport of lighter parts, FX lifting magnets can be supplied with additional towing eyes.

Model	Item-Nr.	Max. towing load (kg)
FX-150 Towing Eye	8 1101 0001	30
FX-300 Towing Eye	8 1101 0002	60
FX-600 Towing Eye	8 1101 0003	120
FX-1000 Towing Eye	8 1101 0004	200

FX-HV R450 S for Round material

FX-HV 200-S Special model

FX-HV V200-S Special model

FX-LT Permanent Magnetic truss

FX-LT magnetic trusses are adapted to the needs of sheet metal fabricators, laser and flame cutters. Two FX-VV lifting magnets and a lightweight truss enable loading and unloading of machines with sheet metal, or horizontal pick-up of workpieces with a central cutout. In a few simple steps, the magnets can be removed from the truss to lift blanks and small sheets with only one magnet.

Included:
- 2 Lifting magnets
- Truss with suspension elements

Quickly dismantled for single use

Optionally available with 360° rotating device

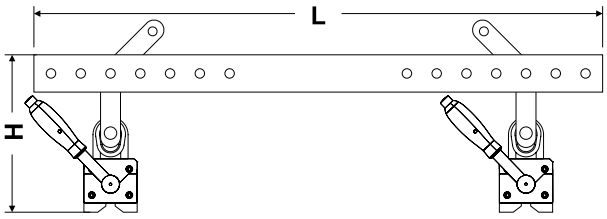

Model	Item-Nr.	incl. 2x FX	WLL (kg)	WLL from (mm)	Max. Load dimensions (mm)	Dimensions (mm) L	Dimensions (mm) H	Weight (kg)
FX-LT600	1104 0600	FX-P330	600	10	4000 x 1500	1600	270	44
FX-LT750	1104 0750	FX-VV400	750	15	5000 x 1500	1600	270	44
FX-LT1000	1104 1000	FX-600	1000	20	5000 x 1500	1600	291	58
FX-LT1600	1104 1600	FX-800	1600	20	5000 x 2000	1600	360	86
FX-LT2600	1104 2600	FX-1500	2600	25	5000 x 2500	2052	391	165
FX-LT3200	1104 3200	FX-2000	3200	50	5000 x 2500	2000	480	305
FX-LT4800	1104 4800	FX-3000	4800	50	5000 x 2500	2000	600	410
All models optionally available with rotating device, ask us								

FX-LT Permanent Magnetic truss

FX-LT600

Material thickness (mm)	Max. Dimensions (mm) L (max)	W (max)	WLL (kg)
>= 3	2000	1000	120
>= 4	3000	1500	160
>= 6	3500	1500	250
>= 8	4000	1500	480
>= 10	4000	1500	600

FX-LT750

Material thickness (mm)	Max. Dimensions (mm) L (max)	W (max)	WLL (kg)
>= 4	3000	1500	180
>= 6	3500	1500	260
>= 8	4000	1500	450
>= 10	4500	1500	600
>= 15	5000	1500	750

FX-LT1000

Material thickness (mm)	Max. Dimensions (mm) L (max)	W (max)	WLL (kg)
>= 4	3000	1500	180
>= 6	3000	1500	250
>= 8	4000	1500	300
>= 10	4500	1500	500
>= 15	4500	1500	820
>= 20	5000	1500	1000

FX-LT1600

Material thickness (mm)	Max. Dimensions (mm) L (max)	W (max)	WLL (kg)
>= 4	3000	2000	250
>= 6	3000	2000	350
>= 8	4000	2000	420
>= 10	4500	2000	700
>= 15	4500	2000	1150
>= 20	5000	2000	1600

FX-LT2600

Material thickness (mm)	Max. Dimensions (mm) L (max)	W (max)	WLL (kg)
>= 10	4500	2000	800
>= 15	5000	2000	1130
>= 20	5000	2000	1400
>= 25	5000	2500	2600

FX-LT3200

Material thickness (mm)	Max. Dimensions (mm) L (max)	W (max)	WLL (kg)
>= 15	4000	2000	800
>= 20	5000	2000	1600
>= 25	5000	2000	1920
>= 40	5000	2500	2560
>= 50	5000	2500	3200

FX-LT4800

Material thickness (mm)	Max. Dimensions (mm) L (max)	W (max)	WLL (kg)
>= 15	5000	2000	1200
>= 20	5000	2000	2400
>= 25	5000	2500	2880
>= 40	5000	2500	3840
>= 50	5000	2500	4800

FX-KT Small trusses

FX-KT small trusses are adapted to the needs of sheet metal processors, laser and flame cutters. Two FX magnets and an adjustable small truss enable the transport of workpieces with a central cutout. In particular, rings and cylindrical workpieces with a central cutout can be transported efficiently and effortlessly with the FX-KT.

In just a few steps, the magnets can be removed from the truss to lift blanks and small sheets with only one magnet.

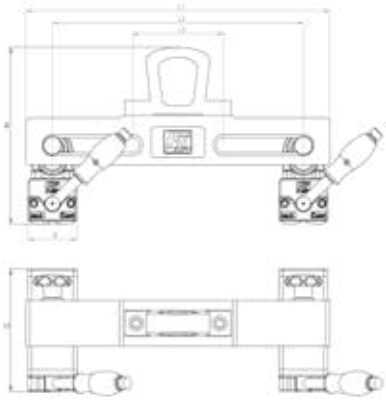

Model	Item-Nr.	WLL (kg)	Dimensions (mm) from (mm)	L1	L2	L3	B	C	H	Magnetic adjustment inner edge-inner edge (mm)	Weight (kg)
FX-KT 240-260	1105 0240-260	240	8	400	330	120	64	161	233	58-260	15
FX-KT 240-420	1105 0240-420	240	8	560	484	120	64	161	233	58-420	15
FX-KT 240-470	1105 0240-470	240	8	607	537	120	64	161	233	58-470	20
FX-KT 240-540	1105 0240-540	240	8	680	603	120	64	161	233	58-540	22
FX-KT 480-440	1105 0480-440	480	15	650	504	150	87	205	269	65-440	26
FX-KT 480-600	1105 0480-600	480	15	800	690	150	87	205	269	65-600	30
FX-KT 480-800	1105 0480-800	480	15	1000	887	150	87	205	286	65-800	32

Special Solutions

We manufacture permanent lifting magnets with a wide variety of special pole shoes and as load crossbars for almost all geometries. We manufacture magnets for spherical surfaces, with long pole shoes, for rings, sleeves and profiles. All special load lifting magnets are designed, tested and documented according to EN 13155:2022 and MRL 2006/42 EWG.

FX-R100 S

FX-WP300

FX-R450

ON
OFF
FX-R225
FX LIFT

Electro-Permanent Lifting Magnets

Electro-Permanent magnet technology stands for maximum safety when it comes to lifting magnets. The advantages of the reliability of permanent magnets and the user-friendliness of electromagnets are combined in a single concept. In the event of a cable break or power failure, the lifted load cannot drop. There are no batteries to maintain, activation/deactivation takes place at the touch of a button or by radio, and the pole reversal control ensures safe release of the magnets from the workpiece. We offer suitable solutions for different requirements.

Page 23 - 37

FXE electro-permanent lifting magnets are equipped with onBoard control technology for direct connection to mains voltage - the fast, user-friendly plug & play solution for loads up to 7.2t

Page 26 - 27

FXE-L in long, narrow design for holding support profiles, strips, tubes and rods achieve their maximum holding force already from 15mm material thickness

Page 34 - 35

FXE-HD electro-permanent lifting magnets for heavy-duty use. Designed for Workpieces up to 16t

Page 36

FXE-MH electro-permanent lifting magnets for extremely heavy-duty use on workpieces up to workpieces up to 40t

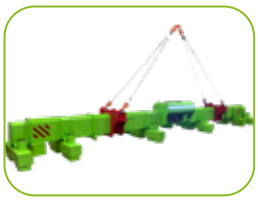

Page 38 - 45

FXE trusses in various concepts for almost any individual application

Page 46 - 48

FXE-M Modular electro-permanent lifting magnet program

Page 49

The MCF control units are available as individual boards and as a complete control cabinet solution. MCF are operated in conjunction with FXE-M modules

Page 50 - 51

Excavation magnets and suitable controls

Within the application concepts described, FXE has 4 different magnetic field designs, defined by different pole configurations. The appropriate pole design must be selected depending on the requirements profile.

Pole type 50

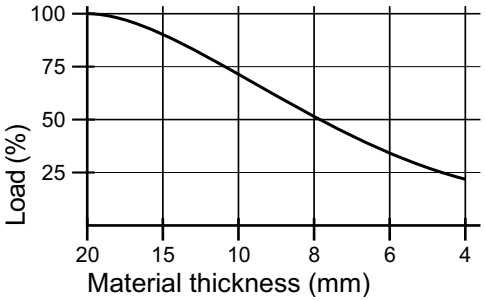

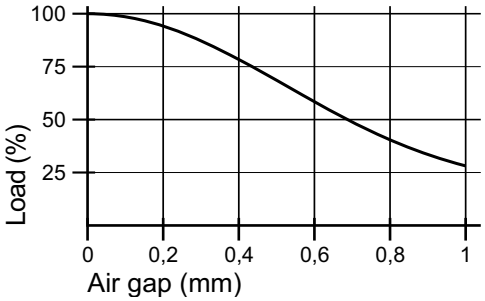

Pole type 50 is designed for lifting sheet metal from 4mm and steel parts with flat or machined surface. The rated values of the FXE lifting magnets with pole type 50 are achieved up to an air gap of 0.3mm. With air gap 0, the pole 50 achieves 3.8 kN holding force.

Pole type 50+

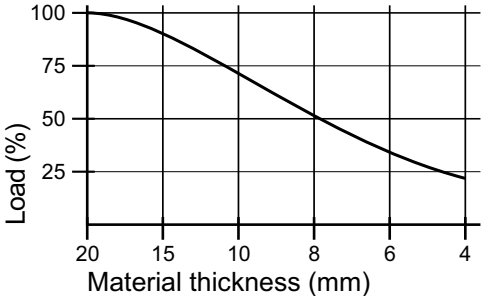

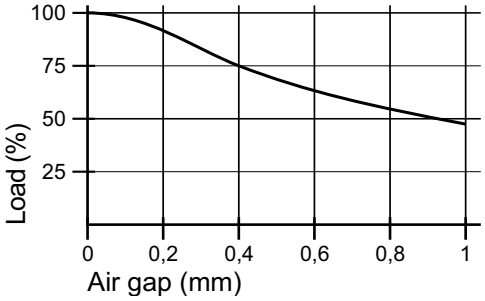

Pole type 50+ has a reinforced magnet system with the same pole size as pole type 50. This results in better holding forces with poorer surfaces, especially when pole extensions are required. 3.8 kN holding force.

Pole type 80

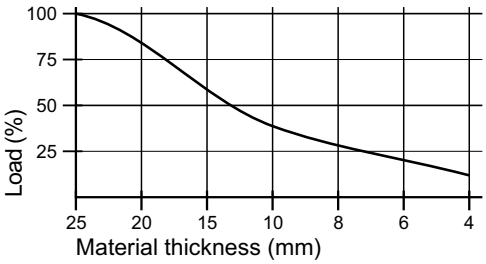

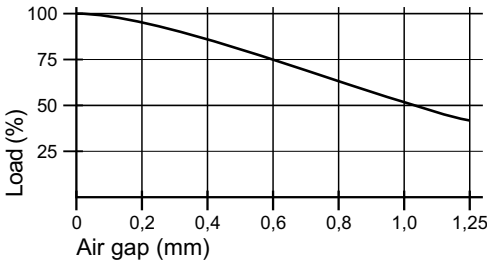

Pole type 80 is designed for lifting sheets from 8mm and solid steel parts and flame cuts with medium air gap. The ratings of FXE lifting magnets with pole type 80 are achieved up to an air gap of 0.4mm. At air gap 0, each pole 80 achieves 9 kN holding force.

Pole type 100

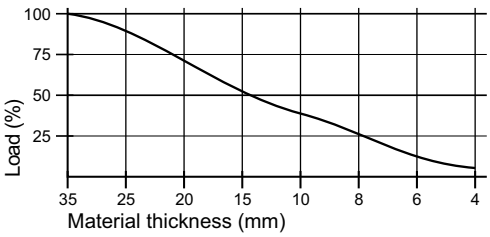

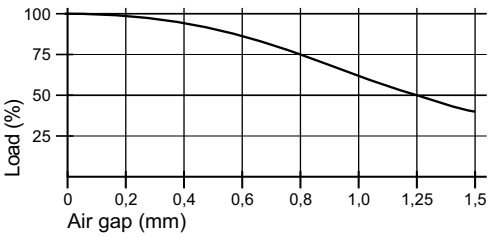

Pole type 100 is designed for lifting heavy plates from 10mm and solid steel, formed and forged parts with larger air gap. The ratings of FXE lifting magnets with pole type 100 are achieved up to an air gap of 0.6mm. At air gap 0, each pole 100 achieves 14.5 kN holding force.

FXE Electro-Permanent Lifting Magnets

FXE lifting magnets are the professional solution for frequent handling of workpieces.

They are very robustly built and designed for continuous use. The electrical control allows the operator to switch the device without physical effort, even in places that are difficult to access. The permanent magnet system is activated in just 0.8 seconds at the touch of a button, and the workpiece is safely released when it is switched off. The unit is simply connected to mains voltage. This means that the unit is ready for use with very little installation effort. In the event of a power failure, the load is held by the permanent magnetic field. This eliminates the need for vulnerable and high-maintenance back-up batteries. A quick conversion of crane systems with conventional mains-powered electromagnets is possible without any problems. FXE lifting magnets comply with the latest standards and offer the maximum in safety and ease of operation. With our standard sizes up to 7200 kg, we have the right device for almost every application.

FXE-150/50+ • FXE-300/50 • FXE-500/50
Electro-Permanent Lifting Magnets

Equipped with pole type 50/50+ and a maximum load capacity of 150/300/500 kg, which is achieved with material thicknesses from 15 mm, and with small magnetically active surfaces, these easy-to-guide and easy-to-operate devices are recommended for lifting series parts as well as small cast and forged parts. These easy-to-guide and operate devices are recommended for lifting series parts, blanks and small cast and forged parts.

FXE-150/50+

Max. Load capacity at sheets and 4-edge pipes

Material-/ Wall thickness	WLL	Max. Dimensions L (max.)	W (max.)
from 4 mm	30 kg	1000	500
from 6 mm	60 kg	1200	600
from 8 mm	80 kg	1200	600
from 10 mm	100 kg	1200	600
from 15 mm	150 kg	1200	600

FXE-300/50

Max. Load capacity at sheets and 4-edge pipes

Material-/ Wall thickness	WLL	Max. Dimensions L (max.)	W (max.)
from 4 mm	70 kg	1800	1500
from 6 mm	140 kg	2000	1500
from 8 mm	200 kg	2000	1500
from 10 mm	280 kg	2000	1500
from 15 mm	300 kg	2000	1500

FXE-500/50

Max. Load capacity at sheets and 4-edge pipes

Material-/ Wall thickness	WLL	Max. Dimensions L (max.)	W (max.)
from 4 mm	100 kg	1800	1500
from 6 mm	200 kg	2000	1500
from 8 mm	300 kg	2000	1500
from 10 mm	400 kg	2000	1500
from 15 mm	500 kg	2000	1500

Model	Item-Nr.	WLL (kg)	Dimension (mm) L	W	H	Number Poles °N	Pole structure	Breakaway (kN)	clamping surface (mm)	Weight (kg)
FXE-150/50+	1060 0152	150	164	95	476	2	50+	7,6	116x52	17
FXE-300/50	1060 0301	300	164	164	420	4	50	14	116x116	23
FXE-500/50	1060 0501	500	234	164	420	6	50	22	180x116	31

Depending on the application, we may recommend you these models equipped with Poltyp 50+

FXE-750/50 • FXE-1100/50 • FXE-1600/50
Electro-Permanent Lifting Magnets

Equipped with pole type 50 and a maximum load capacity of 750/1100/1600 kg, which is achieved with material thicknesses from 15mm, these easy-to-guide and operate devices are recommended for lifting sheet metal, laser and flame-cut parts, tools and blanks.

FXE-750/50

Max. Load capacity at sheets and 4-edge pipes

Material-/ Wall thickness	WLL	Max. Dimensions L (max.)	W (max.)
from 4 mm	150 kg	1800	1500
from 6 mm	250 kg	2000	1500
from 8 mm	400 kg	2000	1500
from 10 mm	600 kg	2000	1500
from 15 mm	750 kg	3000	1500

FXE-1100/50

Max. Load capacity at sheets and 4-edge pipes

Material-/ Wall thickness	WLL	Max. Dimensions L (max.)	W (max.)
from 4 mm	200 kg	2000	1500
from 6 mm	370 kg	3000	1500
from 8 mm	600 kg	3000	1500
from 10 mm	900 kg	3000	1500
from 15 mm	1100 kg	3000	1500

FXE-1600/50

Max. Load capacity at sheets and 4-edge pipes

Material-/ Wall thickness	WLL	Max. Dimensions L (max.)	W (max.)
from 4 mm	300 kg	3000	1500
from 6 mm	500 kg	3000	1500
from 8 mm	800 kg	3000	1500
from 10 mm	1400 kg	3000	1500
from 15 mm	1600 kg	3000	2000

Model	Item-Nr.	WLL (kg)	Dimension (mm) L	W	H	Number Poles °N	Pole structure	Breakaway (kN)	clamping surface (mm)	Weight (kg)
FXE-750/50	1060 0701	750	298	164	250	8	50	30	244x116	27
FXE-1100/50	1060 1101	1100	420	164	270	12	50	40	372x116	39
FXE-1600/50	1060 1601	1600	620	164	270	18	50	60	564x116	56
Depending on the application, we may recommend you these models equipped with Poltyp 50+										

FXE-L Electro-Permanent Lifting Magnets

Equipped with pole type 50+ in long narrow design and a maximum load capacity of 400/600/1000 kg, which is achieved with material thicknesses from 15mm, these easy-to-guide and operate devices are recommended for lifting battens, rails, pipes, beams and bars. Also using pole extensions, which make it easier to position the magnets on long narrow loads.

FXE-L400/50+ Electro-Permanent Lifting Magnets

FXE-L400/50+			
Max. Load capacity at sheets and 4-edge pipes			
Material-/ Wall thickness	WLL	Max. Dimensions L (max.)	W (max.)
from 4 mm	70 kg	1800	1000
from 6 mm	140 kg	2000	1000
from 8 mm	200 kg	2000	1000
from 10 mm	250 kg	2500	1000
from 15 mm	400 kg	3000	1000

Model	Item-Nr.	WLL (kg)	Dimension (mm) L	W	H	Number Poles °N	Pole structure	Breakaway (kN)	clamping surface (mm)	Weight (kg)
FXE-L400/50+	1060 0411	400	294	95	450	4	50+	14	244x52	23

FXE-L600/50+ Electro-Permanent Lifting Magnets

FXE-L600/50+			
Max. Load capacity at sheets and 4-edge pipes			
Material-/ Wall thickness	WLL	Max. Dimensions L (max.)	W (max.)
from 4 mm	100 kg	2000	1000
from 6 mm	200 kg	2500	1000
from 8 mm	300 kg	2500	1000
from 10 mm	350 kg	3000	1000
from 15 mm	600 kg	4000	1000

Model	Item-Nr.	WLL (kg)	Dimension (mm) L	W	H	Number Poles °N	Pole structure	Breakaway (kN)	clamping surface (mm)	Weight (kg)
FXE-L600/50+	1060 0611	600	420	95	450	6	50+	22	372x52	31

FXE-L1000/50+ Electro-Permanent Lifting Magnets

FXE-L1000/50+			
Max. Load capacity at sheets and 4-edge pipes			
Material-/ Wall thickness	WLL	Max. Dimensions L (max.)	W (max.)
from 4 mm	150 kg	2500	1500
from 6 mm	300 kg	3000	1500
from 8 mm	400 kg	3000	1500
from 10 mm	500 kg	4000	1500
from 15 mm	1000 kg	5000	1500

Model	Item-Nr.	WLL (kg)	Dimension (mm) L	W	H	Number Poles °N	Pole structure	Breakaway (kN)	clamping surface (mm)	Weight (kg)
FXE-L1000/50+	1060 1011	1000	680	95	450	10	50+	38	628x52	44

FXE-1000/80 Electro-Permanent Lifting Magnets

Equipped with pole type 80 and a maximum load capacity of 1000 kg, which is achieved with material thicknesses from 25 mm, these easy-to-guide and operate devices are recommended for lifting heavy plates, plasma and flame-cut parts, tools and blanks.

FXE-1000/80			
Max. Load capacity at sheets and 4-edge pipes			
Material-/ Wall thickness	WLL	Max. Dimensions L (max.)	W (max.)
from 8 mm	200 kg	2000	1500
from 10 mm	300 kg	2000	1500
from 15 mm	600 kg	2000	1500
from 25 mm	1000 kg	2000	1500

Model	Item-Nr.	WLL (kg)	Dimension (mm) L	W	H	Number Poles °N	Pole structure	Breakaway (kN)	clamping surface (mm)	Weight (kg)
FXE-1000/80	1060 1002	1000	228	228	295	4	80	36	172x172	39

FXE-2500/80 Electro-Permanent Lifting Magnets

Equipped with pole type 80 and a maximum load capacity of 2500 kg, which is achieved with material thicknesses from 25 mm, these easy-to-guide and operate devices are recommended for lifting heavy plates, plasma and flame-cut parts, tools and blanks.

FXE-2500/80			
Max. Load capacity at sheets and 4-edge pipes			
Material-/ Wall thickness	WLL	Max. Dimensions L (max.)	W (max.)
from 8 mm	500 kg	2000	1500
from 10 mm	750 kg	3000	1500
from 15 mm	1500 kg	3000	1500
from 25 mm	2500 kg	3000	2000

Model	Item-Nr.	WLL (kg)	Dimension (mm) L	W	H	Number Poles °N	Pole structure	Breakaway (kN)	clamping surface (mm)	Weight (kg)
FXE-2500/80	1060 2502	2500	506	228	295	10	80	90	448x172	77

FXE-4000/80 Electro-Permanent Lifting Magnets

Equipped with pole type 80 and a maximum load capacity of 4000 kg, which is achieved with material thicknesses from 25 mm, these easy-to-guide and operate devices are recommended for lifting heavy plates, plasma and flame-cut parts, tools and blanks. The control and operating unit, which is offset to the outside, makes it easier to clear the machine table.

also available with 2 control panels

FXE-4000/80			
Max. Load capacity at sheets and 4-edge pipes			
Material-/ Wall thickness	WLL	Max. Dimensions L (max.)	W (max.)
from 8 mm	800 kg	3000	2000
from 10 mm	1200 kg	3000	2000
from 15 mm	2400 kg	3500	2000
from 25 mm	4000 kg	4000	2500

Model	Item-Nr.	WLL (kg)	Dimension (mm) L	W	H	Number Poles °N	Pole structure	Breakaway (kN)	clamping surface (mm)	Weight (kg)
FXE-4000/80	1060 4002	4000	783	228	295	16	80	144	724x172	132

FXE-800-4800/100 Electro-Permanent Lifting Magnets

Equipped with pole type 100 and a maximum load capacity of 800/1600/2400/3200/4800 kg, reached with material thicknesses starting from 35 mm, these easy-to-guide and operate devices are recommended for lifting forgings, heavy plates, plasma and flame-cut parts, tools, cast blocks...

FXE-800/100

Max. Load capacity at sheets and 4-edge pipes

Material-/ Wall thickness	WLL	Max. Dimensions L (max.)	W (max.)
ab 35 mm	800 kg	2000	1000

FXE-1600/100

Max. Load capacity at sheets and 4-edge pipes

Material-/ Wall thickness	WLL	Max. Dimensions L (max.)	W (max.)
ab 10 mm	400 kg	2000	1500
ab 20 mm	1000 kg	2000	1500
ab 35 mm	1600 kg	3000	2000

FXE-2400/100

Max. Load capacity at sheets and 4-edge pipes

Material-/ Wall thickness	WLL	Max. Dimensions L (max.)	W (max.)
ab 10 mm	600 kg	2000	1500
ab 20 mm	1500 kg	3000	2000
ab 35 mm	2400 kg	3000	2000

FXE-3200/100

Max. Load capacity at sheets and 4-edge pipes

Material-/ Wall thickness	WLL	Max. Dimensions L (max.)	W (max.)
ab 10 mm	800 kg	3000	2000
ab 20 mm	2200 kg	3000	2000
ab 35 mm	3200 kg	4000	2000

FXE-4800/100

Max. Load capacity at sheets and 4-edge pipes

Material-/ Wall thickness	WLL	Max. Dimensions L (max.)	W (max.)
ab 10 mm	1200 kg	3000	2000
ab 20 mm	3000 kg	4000	2500
ab 35 mm	4800 kg	4000	3000

Model	Item-Nr.	WLL (kg)	Dim. (mm) L	W	H	Number Poles °N	Pole type	Breakaway (kN)	Clamping surface (mm)	Weight (kg)
FXE-800/100	1060 0803	800	298	175	210	2	100	29	222x102	52
FXE-1600/100	1060 1603	1600	296	296	345	4	100	58	222x222	82
FXE-2400/100	1060 2403	2400	415	296	335	6	100	87	342x222	118
FXE-3200/100	1060 3203	3200	536	296	335	8	100	112	462x222	154
FXE-4800/100	1060 4803	4800	778	296	400	12	100	174	702x222	202

FXE-R Electro-Permanent Lifting Magnets

FXE-R lifting magnets that can lift round material or, both round and flat material, we manufacture from our basic FXE models with pole shoes that can lift the customer‘s specific diameter bandwidths, individually or in layers.

FXE HV device for horizontal/vertical lifting

FXE-400/50+ S

FXE with special handle and weld-on hook

FXE with custom handle

FXE-1600/50 HV-S

FXE with custom handles

FXE with long guide column for removal from wire baskets

FXE 600/50+ S

FXE-R

FXE-T 250-400

FXE-MP 150-S

FXE for dished heads

FXE-HD Electro-Permanent Lifting Magnets

FXE-HD electro-permanent lifting magnets for massive use when lifting large loads. FXE-HD are equipped with a strong pole type 100 magnet system and other features ensure maximum user-friendliness and safety.

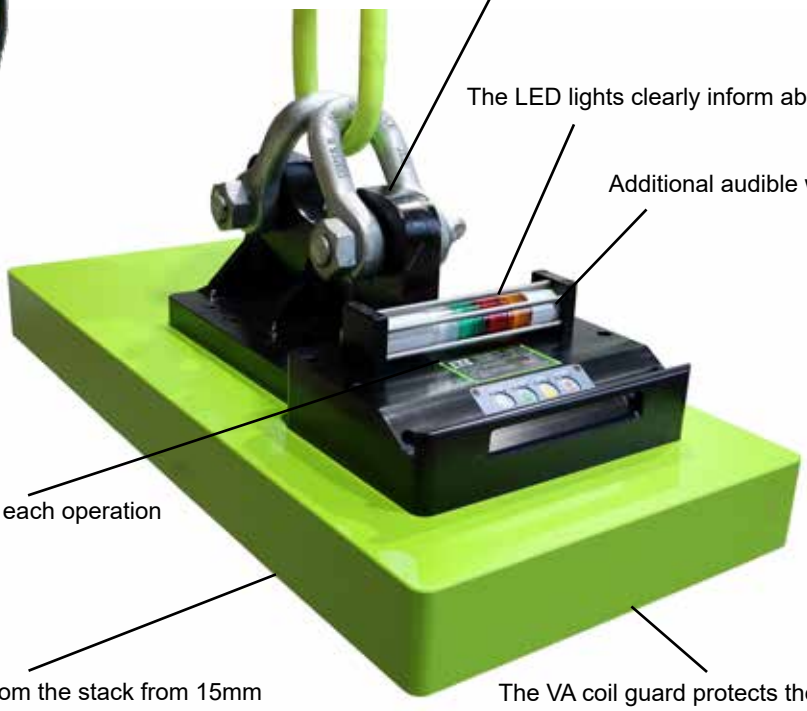

The lifting eye sensor prevents loosening when the load is suspended

The LED lights clearly inform about the switching status

Additional audible warning in pick-up mode

The radio remote control keeps the user at a distance from the suspended load

The double magnetization cycle at each operation checks the safety factor

Removal of individual sheets from the stack from 15mm

The VA coil guard protects the clamping surface from chips and heat radiation

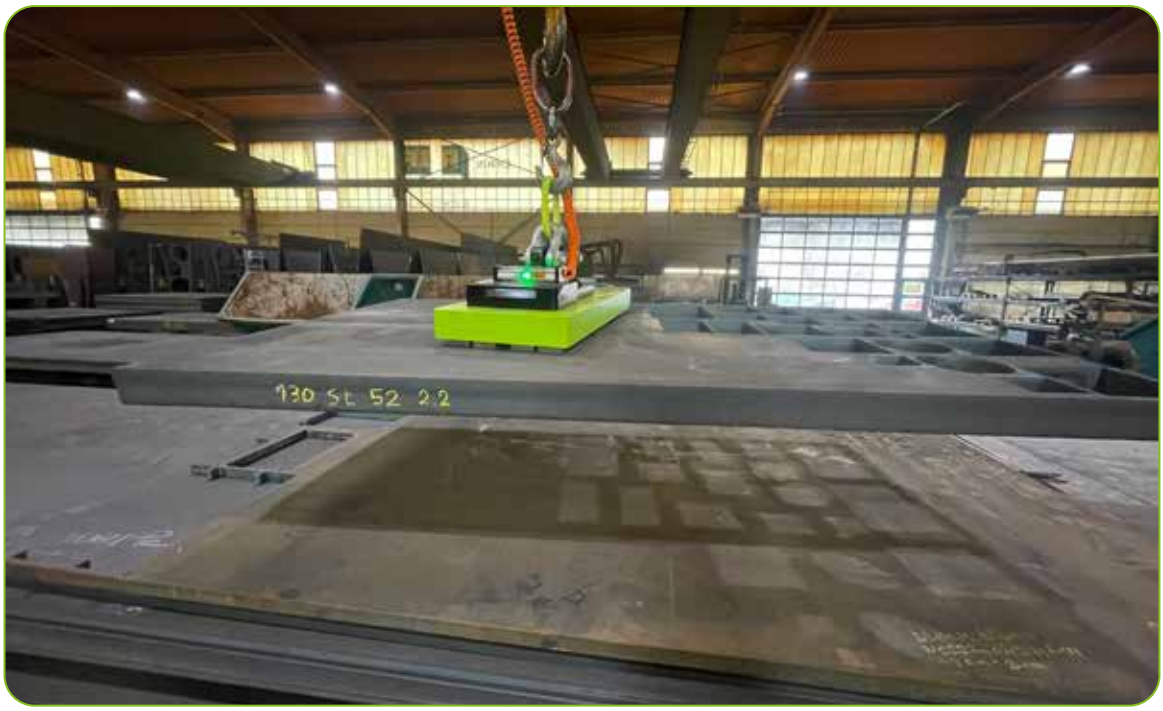

FXE-HD7200/100

Max. Load capacity at sheets and 4-edge pipes

Material-/ Wall thickness	WLL	Max. Dimensions L (max.)	W (max.)
ab 10 mm	2400 kg	3000	1500
ab 20 mm	4800 kg	3600	2000
ab 35 mm	7200 kg	4250	2500

FXE-HD9600/100

Max. Load capacity at sheets and 4-edge pipes

Material-/ Wall thickness	WLL	Max. Dimensions L (max.)	W (max.)
ab 10 mm	3200 kg	3000	1500
ab 20 mm	6400 kg	3600	2000
ab 35 mm	9600 kg	4250	2500

FXE-HD12800/100

Max. Load capacity at sheets and 4-edge pipes

Material-/ Wall thickness	WLL	Max. Dimensions L (max.)	W (max.)
ab 10 mm	4200 kg	3000	1500
ab 20 mm	6400 kg	4500	2000
ab 35 mm	12800 kg	6000	2500

FXE-HD16000/100

Max. Load capacity at sheets and 4-edge pipes

Material-/ Wall thickness	WLL	Max. Dimensions L (max.)	W (max.)
ab 10 mm	4200 kg	3000	1500
ab 20 mm	6400 kg	4500	2000
ab 35 mm	16000 kg	6000	2500

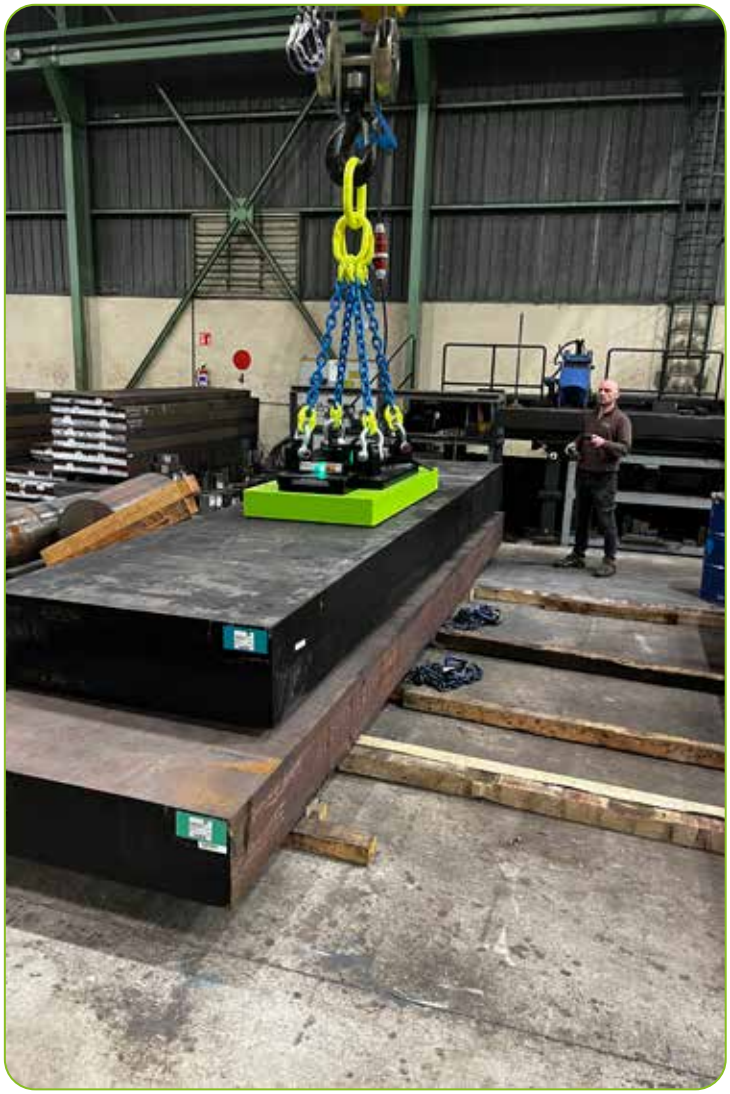

Application video here

Pole type 100

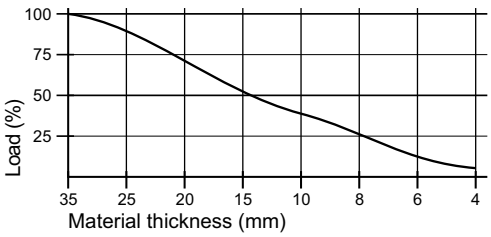

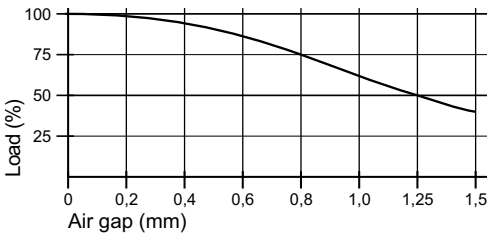

Pole type 100 is designed for lifting heavy plates from 10mm and solid steel, formed and forged parts with larger air gap. The ratings of FXE lifting magnets with pole type 100 are achieved up to an air gap of 0.6mm. At air gap 0, each pole 100 achieves 14.5 kN holding force.

Model	Item-Nr.	WLL (kg)	Dimensions (mm) L	W	H	Number Poles °N	Pole type	Breakaway (kN)	Weight (kg)
FXE-HD7200/100	1060 7203-1	7200	810	450	532	18	100	261	400
FXE-HD9600/100	1060 9603-1	9600	1030	425	665	24	100	348	450
FXE-HD12800/100	1060 12803-1	12800	1030	600	734	32	100	464	500
FXE-HD16000/100	1060 16003-1	16000	1270	600	734	40	100	580	680

FXE-MH Elektro-Permanent Lifting Magnets

FXE-MH electro-permanent lifting magnets are especially suitable for transporting slabs and blocks.MH type electro-permanent modules are designed to safely lift large loads with a large air gap.

FXE Electro-Permanent Lifting Magnets

The FXE electr-opermanent lifting magnet series can be customized with smart accessories to further increase productivity and safety.

Spiral cable
The standard delivery includes 2m of heavy rubber spiral cable and a CEE three-phase plug (16/32A). High-quality spiral cables make sense especially for small fast hoists, up to 4m hook height a spring cable drum can be dispensed with altogether.

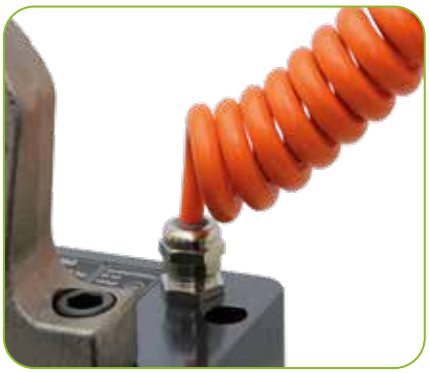

Lifting eye sensor
The lifting eye sensor checks whether the lifting eye on the magnet is under tension and allows demagnetization only when the lifting eye is load-free. This provides more safety, but prevents the option of dropping pieces of waste over a container, for example.

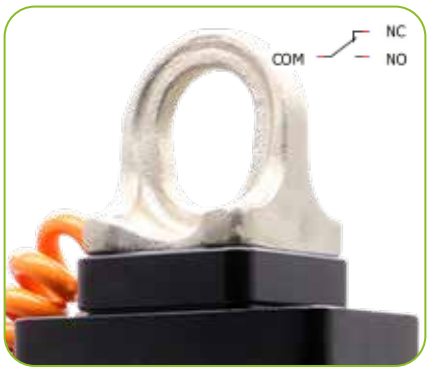

Guide handle
Especially when removing small workpieces from the flame cutting table, the magnet cannot only be positioned with the crane, but must be guided manually. The „guide handle“ option is recommended here. With integrated switching, this allows the operator to conveniently clear the table from the side.

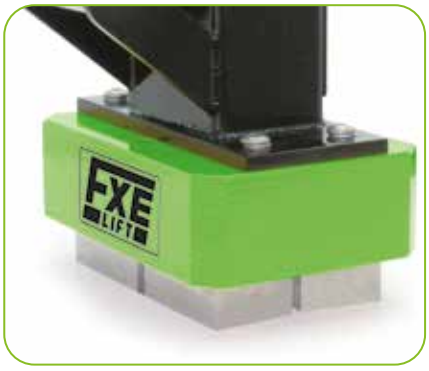

Special pole shoe
For holding hot parts, we recommend the use of heat protection pole shoes. For round material, profiles or non-shaped castings, we manufacture customer-specific pole shoes so that the pick-up surface fits the load.

Radio Remote Control
Radio has a range of at least 30m, but therefore it is also recommended to use the option „lifting eye sensor“ when using a radio remote control.

Spring cable reels
Spring cable reels can be installed directly on the crane trolley to supply the bottom block with power for FXE electro-permanent lifting magnets. Spring cable reels are available for any lifting height to match the system.

Article	Item-Nr.	Weight (kg)
Spiral cable 3x2.5 1-5m	1013 5325	2
Spiral cable 3x2.5 0,5-2m	1013 5326	1
Spiral cable 4x4mm² 1-5m (use from FXE3200)	1013 626	3
4x6 mm² Spring cable reel 10m	1016 0001	34
5x2,5mm² Spring cable reel 10m	1016 0002	20

Article	Item-Nr.	Weight (kg)
Eyelet-Sensor FXE	8 1060 0001	1
Eyelet-Sensor Trusses	8 1060 0002	2
Pick Up Option	8 1060 0003	-
Special pole shoes	on Request	-
Radio remote control	1013 6002	-
Handle FXE	8 1060 0005	15

FXE-T2500/50 • FXE-T4000/80 Magnetic Trusses

FXE-T2500/50 and 4000/80 electric permanent lifting magnet trusses in compact design with on-board control technology are designed for frequent handling of larger formats. Like the FXE lifting magnets, they can be operated directly on mains voltage and are therefore very quickly installed and ready for use. They are controlled directly on the device or optionally via remote control.

Remote control optionally!

FXE-T 4000/80

FXE-T2500/50

Max. Load capacity at sheets

Material-/ Wall thickness	WLL	Max. Dimensions L (max.)	W (max.)
from 4 mm	500 kg	3000	1500
from 6 mm	750 kg	3000	1500
from 8 mm	1250 kg	4000	2000
from 10 mm	1750 kg	4000	2000
from 15 mm	2550 kg	4000	2500

FXE-T4000/80

Max. Load capacity at sheets

Material-/ Wall thickness	WLL	Max. Dimensions L (max.)	W (max.)
from 4 mm	350 kg	4000	1500
from 6 mm	700 kg	4000	1500
from 8 mm	1000 kg	4000	2000
from 10 mm	1250 kg	4000	2000
from 15 mm	2500 kg	5000	2500
from 25 mm	4000 kg	5000	2500

Model	Item-Nr.	WLL (kg)	Dimension (mm) L	W	H	Number Poles °N	Pole structure	Breakaway (kN)	Weight (kg)
FXE-T2500/50	1068 2501	2500	1000	630	380	2x18	50	96	138
FXE-T4000/80	1068 4002	4000	1200	500	380	2x10	80	170	175

FXE-T6400/9600 Magnetic Truss

The FXE-T Electro Permanent Magnetic Truss is a fully equipped standard unit with all options.
The truss with 6400 kg max. load is equipped with sliding magnetic modules and can thus safely move sheet formats from min. 1200mm length to max. 6000mm length.

Delivery includes:

- Radio remote control with Pick Up function to lift individual plates from 6mm
- Weld-on hooks on the sides for each 4t max.
- 2-strain chains
- Lifting-eyelet sensor, demagnetizing only possible when load-free
- 360° LED signal tower
- Stainless steel guide handles
- Primary connection cable ready for 400V/25A fuse/CEE 32A plug

FXE-T6400/80

Max. Load capacity at sheets

Material-/ Wall thickness	WLL	Max. Dimensions L (max.)	W (max.)
from 4 mm	500 kg	4000	2000
from 6 mm	1000 kg	6000	2500
from 8 mm	1400 kg	6000	2500
from 10 mm	2000 kg	6000	3000
from 15 mm	4000 kg	6000	3000
from 25 mm	6400 kg	6000	3000

FXE-T9600/100

Max. Load capacity at sheets

Material-/ Wall thickness	WLL	Max. Dimensions L (max.)	W (max.)
from 4 mm	400 kg	4000	2000
from 6 mm	600 kg	6000	2000
from 8 mm	1400 kg	6000	3000
from 10 mm	2000 kg	6000	3000
from 15 mm	4000 kg	6000	3000
from 25 mm	6400 kg	6000	3000
from 35 mm	9600 kg	6000	3000

Model	Item Nr.	WLL (kg)	Dimensions (mm) L	W	H	Number Poles °N	Pole structure	Breakaway (kN)	Weight (kg)
FXE-T6400/80	1068 6402	6400	3150	780	1900	2x16	80	272	520
FXE-T9600/100	1068 9603	9600	2960	778	1440	2x12	100	329	700

FXE-TT Telescopic Magnetic Truss

FXE-TT telescopic trusses are equipped with electro-hydraulic telescopic arms and are suitable for handling sheets of 3-16m length. The system consists of fixed and movable crossbars, each equipped with two magnetic modules.
The truss length can be adjusted individually via radio remote control. The magnetic system can be switched on the truss itself or on the radio remote control included in the scope of delivery.

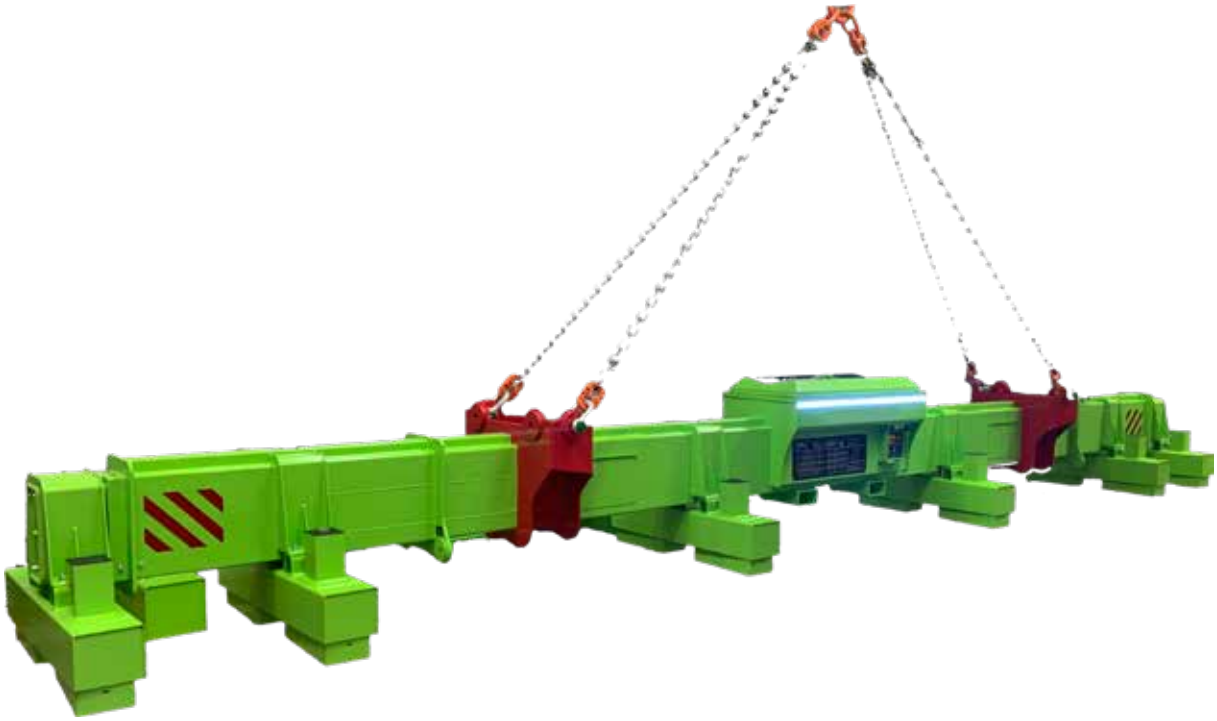

Clever Details

- Main beam formed as super-stiff sectional tube; tested for 600,000 load cycles
- Suspension from one or two crane hooks possible
- 4 additional anchor points for load handling attachments of 4.5 t each or optionally also weld-on hooks
- Service flap at the head ends
- Internal energy chain for cable routing
- Easily accessible OnBoard control and service flaps at all connection points
- Spiral cables supply the floating suspended magnetic modules
- Spring dampers in the magnetic suspension provide compensation for deflection and even load distribution
- A massive switching mechanism checks the chain tension and allows loosening only when the chain is load-free
- Maintenance-free LED signal lamp
- Ergonomic and handy radio remote control
- Supplied with power plug - Plug and Play

Application video here

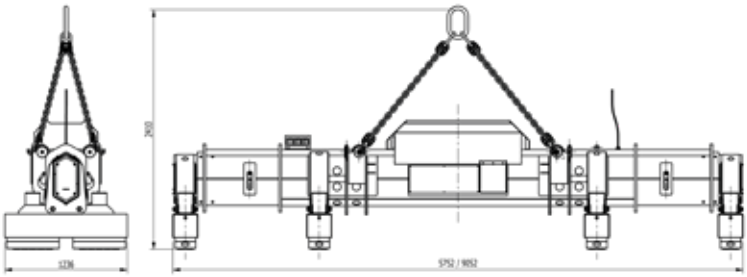

FXE-TT
4-XXX

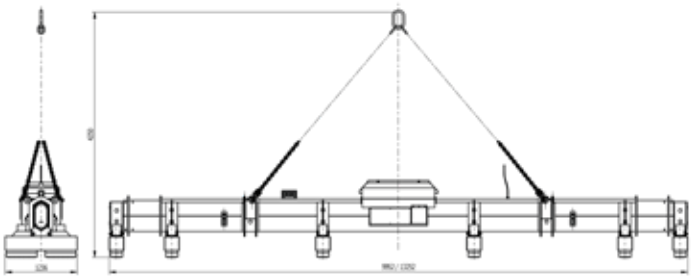

FXE-TT
6-XXX

Model	Item-Nr.	Load dimensions						Weight (kg)
		thickness	Length		Width		Load	
		min. (mm)	min. (mm)	max. (mm)	min. (mm)	max. (mm)	(kg)	
FXE-TT 4-11000	1068 0410	5	3000	12000	500	3500	11.000	2500
FXE-TT 4-14000	1068 0414	5	3000	12000	500	3500	14.000	2500
FXE-TT 4-16500	1068 0416	5	3000	12000	500	3500	16.500	2600
FXE-TT 4-20000	1068 0420	8	3000	12000	500	3500	20.000	2600
FXE-TT 6-16000	1068 0616	5	3000	16000	500	3500	16.000	4200
FXE-TT 6-20000	1068 0620	5	3000	16000	500	3500	20.000	4200
FXE-TT 6-24000	1068 0624	5	3000	16000	500	3500	24.000	4300
FXE-TT 6-30000	1068 0630	8	3000	16000	500	3500	30.000	4500

FXE-TP Electro-Permanent Magnetic Truss

FXE-TP electro-permanent lifting magnets are ideally suited for beams and profiles due to their special design. The 3-sided active pole surface allows to pick up beams at the web or to rotate them as well. FXE-TP lifting magnets are also available as a truss solution, specially tailored to your application.

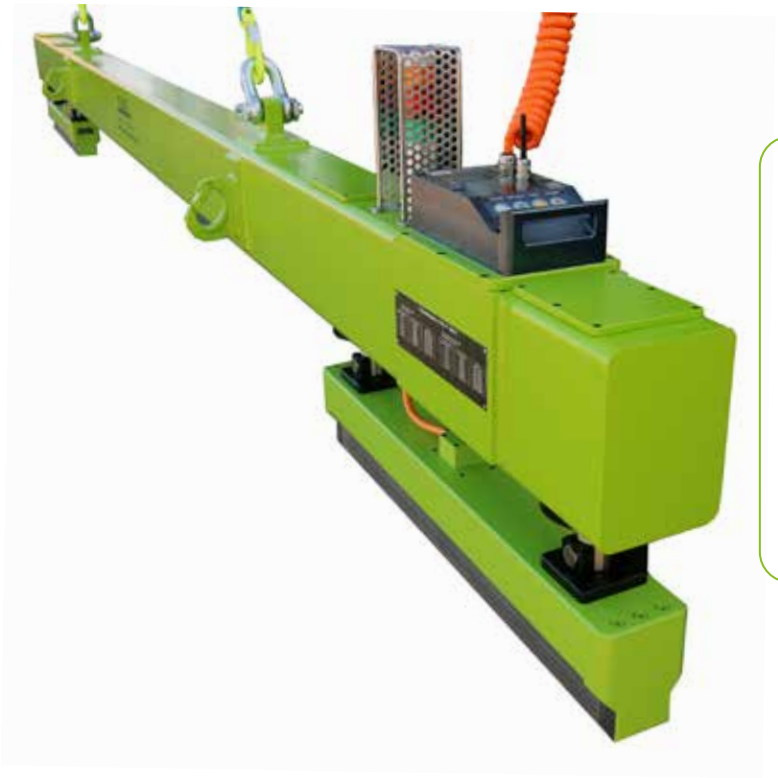

Application video here

FXE-TTO Electro-Permanent Magnetic Truss

FXE TTO lifting magnet trusses are used to clear large areas of laser or flame cutting tables. Parts from 100x100mm are removed from the table in layers.

Depending on the material thickness, sheets can also be placed with the FXE-TTO. The design of the system depends on the sheet format to be moved (uncut, LxWxH) and the dimensions of the smallest cut.

FXE-T Electro-Permanent Deep field Truss

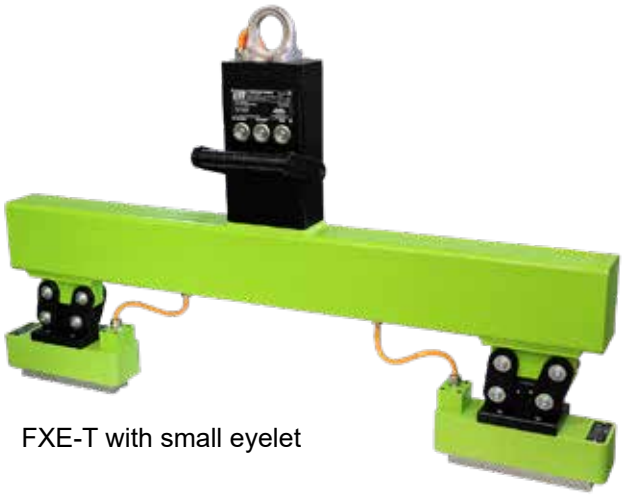

FXE-T with small eyelet

FXE-TP 2000/80 S

FXE-T with handle for metal strips and beams

FXE-T for coils

FXE-T for hot slabs

FXE-T 3800-4200

Telescopic up to x meters

FXE-T Coil truss

FXE-T 750/50 S ring truss

FXE-M Modular Electro-Permanent Lifting Magnets

FXE-M electro-permanent load lifting magnet modules can be combined with MCF magnet control units to form modular load lifting systems.Thus, a single FXE-M module with an MCF 1-channel control unit can be used, for example, on the crane of a flame cutting plant, or 4 FXE-M modules, controlled together or individually by an MCF 4-channel control unit, can work in a fully automatic sectional steel plant.

In use on cranes, manipulators, conveyor systems and robots, FXE-M modules have proven themselves thousands of times. FXE-M modules are manufactured in monoblock technology and are extremely stable.

As with the other products in the FXE series, there is a choice of 4 different pole types to select the right magnet module for the load, dimensions and surface.

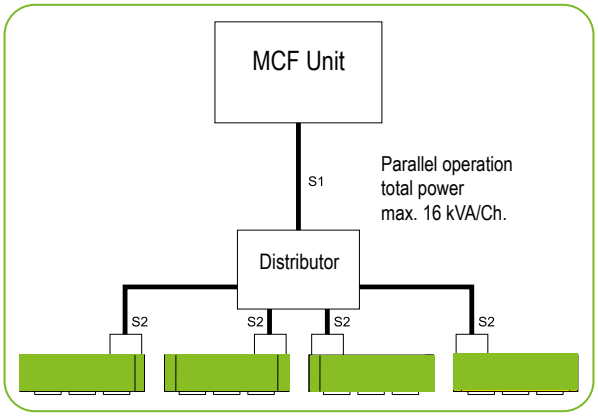

	Length cable max. S1 + S2 max. (m)	
	3 x 2,5²	3 x 4²
up to 8 kVA	20	30
up to 16 kVA	6	15

Model	Item-Nr.	WLL (kg)	WLL from (mm)	Dimensions (mm) L	W	H	Number Poles °N	Pole structure	Breakaway (kN)	Weight (kg)
FXE-M 150/50	1061 0101	150	15	164	95	64	2	50	7	6
FXE-M 300/50	1061 0301	300	15	164	164	64	4	50	14	12
FXE-M 400/50	1061 0401	400	15	294	95	64	4	50	14	12
FXE-M 500/50	1061 0501	500	15	234	164	64	6	50	21	16
FXE-M 600/50	1061 0601	600	15	420	95	64	6	50	21	16
FXE-M 750/50	1061 0701	750	15	298	164	64	8	50	30	20
FXE-M 1000/50	1061 1001	1000	15	680	95	64	10	50	36	28
FXE-M 1100/50	1061 1101	1100	15	420	164	64	12	50	40	32
FXE-M 1600/50	1061 1601	1600	15	620	164	64	18	50	60	46
FXE-M 400/50+	1061 0411	400	15	294	95	83	4	50+	14	16
FXE-M 600/50+	1061 0611	600	15	420	95	83	6	50+	21	20
FXE-M 1000/50+	1061 1011	1000	15	680	95	83	10	50+	36	38
FXE-M 1000/80	1061 1002	1000	25	228	228	89	4	80	36	30
FXE-M 2500/80	1061 2502	2500	25	506	228	89	10	80	86	70
FXE-M 4000/80	1061 4002	4000	25	783	228	89	16	80	140	107
FXE-M 1600/100	1061 1603	1600	35	295	296	125	4	100	58	72
FXE-M 2400/100	1061 2403	2400	35	415	296	125	6	100	87	104
FXE-M 3200/100	1061 3203	3200	35	536	296	125	8	100	112	138
FXE-M 4800/100	1061 4803	4800	35	778	296	125	12	100	168	196
FXE-M 7200/100	1061 7203	7200	35	778	415	125	18	100	252	286

Please note declaration for pole structure characteristics page 23 • Workpiece temperature up to 100°C • Optionally withpole shoes for Round material, Profiles, hot Workpieces available • at switching frequency >3/min please query

Model	Voltage (V)	Power (kVA) Impulse	Ohm resistor	Lifting power EN13155 (kg)	clamping surface mm
FXE-M 150/50	380-480	0,6	12,5	150	116x52
FXE-M 300/50	380-480	1,2	25	300	116x116
FXE-M 400/50	380-480	1,2	25	400	244x52
FXE-M 500/50	380-480	1,8	16	500	180x116
FXE-M 600/50	380-480	1,8	16	600	372x52
FXE-M 750/50	380-480	2,4	12,5	750	244x116
FXE-M 1000/50	380-480	3	10,2	1000	628x52
FXE-M 1100/50	380-480	3,6	7,8	1100	372x116
FXE-M 1600/50	380-480	5,4	5,3	1600	564x116
FXE-M 400/50+	380-480	2,4	12,5	400	244x52
FXE-M 600/50+	380-480	3,6	7,8	600	372x52
FXE-M 1000/50+	380-480	6	5,2	1000	628x52
FXE-M 1000/80	380-480	4,8	6,6	1000	172x172
FXE-M 2500/80	380-480	10	2,6	2500	448x172
FXE-M 4000/80	380-480	16	1,9	4000	724x172
FXE-M 1600/100	380-480	12	2,6	1600	222x222
FXE-M 2400/100	380-480	16	1,9	2400	342x222
FXE-M 3200/100	380-480	2x12	2x2,6	3200	462x222
FXE-M 4800/100	380-480	2x16	2x1,9	4800	702x222
FXE-M 7200/100	380-480	3x16	3x1,9	7200	702x342

* Optionally available in 200-230 V protective earthing, IP 55

FXE-M modules are supplied with rear threads for mechanical recording and ready for connection. Connection box with cable, optionally, we offer the following accessories .

Article	Item-Nr.
Eyelet 250kg	9 1061 0001
Eyelet 600 kg	9 1061 0002
Eyelet 1600 kg	9 1061 0003
Eyelet 3200 kg	9 1061 0004
hanging plate 7,2t	9 1061 0005
Spiral cable 3x2.5 1-5m	1013 5325
Spiral cable 3x2.5 0,5-2m	1013 5326
Spiral cable 4x4mm² 1-5m	1013 626

FXE-M More models and special solutions

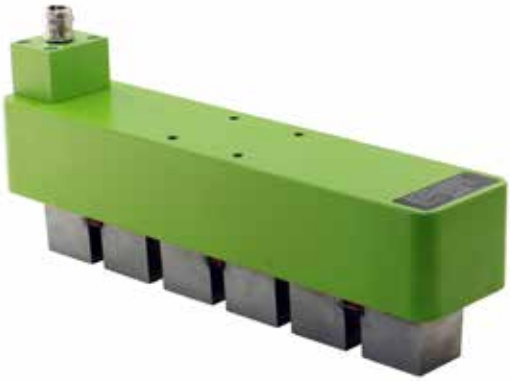

MCF Control unit

The MCF control units are designed to operate electro-permanent magnet modules and are available both as a single board for installation in the customer‘s existing control cabinets and as an IP 54 control cabinet solution.

In addition to the FXE lifting magnet modules, other E-perm magnet components such as clamping plates or clamping blocks can also be controlled with the MCF, both as a single system (ALNICO) and as a double system (ALNICO/ND).
The power and communication parameters of the MCF can be set to customer specifications at the factory, and individual magnets and groups can be controlled, with partial and full magnetization.

Floating outputs and signal outputs provide feedback on the switching status and ensure a very high safety standard. An on-board current control system checks at each cycle whether sufficient power has been absorbed by the magnet module.

The MCF can be controlled via a machine controller, radio remote control, manual pushbutton or other potential-free contacts.

MCF single and multi-channel controllers in IP 54 industrial design are manufactured as standard devices or in customer-specific configuration.

Model	Item-Nr.	LxWxH (mm)	Weight (kg)
MCF PCB without power unit to Pole reversal device	9050 1310	200x120x60	0,4
MCF Power unit	9050 1311	120x50x50	0,2
MCF 1-Channel Pole reversal device	9050 1312-1	300x200x120	6,5
MCF 2-Channel Pole reversal device	9050 1312-2	400x200x120	8,5
MCF 3-Channel Pole reversal device	9050 1312-3	400x300x120	6,5
MCF 4-Channel Pole reversal device	9050 1312-4	400x300x120	12,5
Radio remote control	1013 6001	40x80x14	0,3
LED 360° Signal tower	1013 0026-1	Ø 50x280	1

ERM-X Excavation Magnets

For lifting ground parts, bulk material and for occasionally sorting out magnetizable parts. ERMs are equipped with a mounted switch and integrated rectifier for direct connection to 230 V mains voltage. The field depth is approx. 80-120 mm. Not permitted for transporting solid workpieces in unsecured areas.

Model	Item-Nr.	Dimension Ø (mm)	Dimension H (mm)	Connection voltage (V)	Power (W)	Duty cycle (%)	Weight (kg)
ERM-X 20	1010 200	200	320	230	130	100	30
ERM-X 25	1010 250	250	340	230	220	100	42
ERM-X 30	1010 300	300	360	230	370	100	58
ERM-X 40	1010 400	400	360	230	600	100	114

NER-X Electro Excavation Magnets

Electric round magnet for installation in handling systems, in conjunction with an external power supply or pole reversal control unit.

EHG Electro rectangular magnets, sizes, voltage and duty cycle are customized.

Model	Item-Nr.	Dimensions (mm) Ø	B	Breakaway force acc. to VDE 0580	Coil voltage	Power (W)	Weight (kg)
NER-X 20	1010 21	200	80	12 kN	110 V	130	20
NER-X 25	1010 26	250	100	22 kN	110 V	220	33
NER-X 30	1010 31	300	120	36 kN	110 V	370	49
NER-X 40	1010 41	400	120	50 kN	110 V	600	104
100% duty cycle at 20°C - Other dimensions on request							

POLE REVERSAL DEVICES for Excavation Magnets

The use of pole reversal control units to control excavation magnets makes it possible to adjust the magnetic field very precisely. This means that the holding force of the USG can be infinitely adjusted and, when switched off, performs a demagnetization cycle to ensure that all parts are released and unwanted residual magnetism in the workpiece is minimized.

USG pole reversal control units can be controlled via potential-free contacts with machine controls or buttons in the crane operation and provide feedback on their switching status. As an option, we can also supply manual control units and signal light sets to match the pole reversal control units.

Optionally available: signal light set and hand control unit

Model	Item-Nr.	Dimensions (mm) L	B	T	Output voltage*	max. output power	Connection	Weight (kg)
Pole reversal unit USG-TG IP 54	1013 5004	300	300	200	0-110V DV	440 W	230V / 50Hz	14
Pole reversal unit USG-TG IP 54	1013 5015	460	300	160	0-110V DC	1650 W	230V / 50Hz	9
*also available in other voltages								

Factors affecting the Holding powers of Lifting magnets

For choosing the right lifting magnet model five other factors to consider that affect the lifting force other than the weight of the load:

1. The contact surface
If a distance (air gap) exists between the lifting magnet and the load to be lifted, the magnetic flux is made more difficult and thus reduces the lifting capacity. Rust, paint, dirt, paper or rough machined surface can have such an air gap result and in turn mean a reduction in the lifting force.

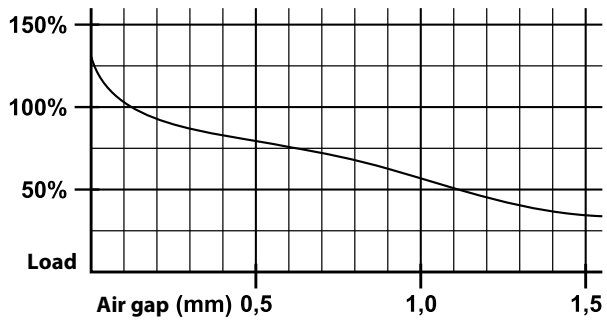

2. Material thickness
The magnetic flux of the lifting magnets requires a minimum material thickness. If the workpiece does not reach this minimum thickness, the lifting force is smaller. For larger lifting benefits greater material thicknesses are required.

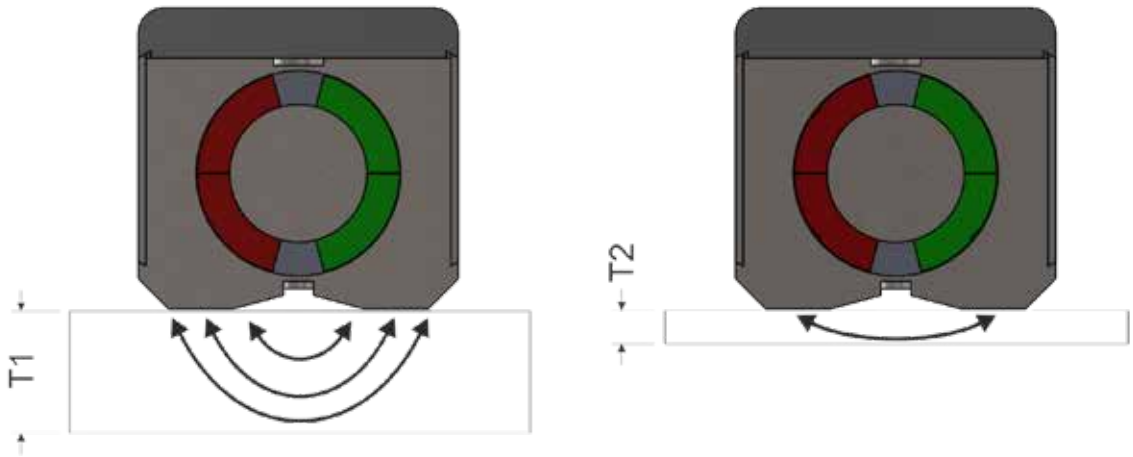

3. Workpiece dimensions / intrinsic stability
If the length or width of the load is larger, the workpiece sags and is formed between the lifting magnet and the load - especially at low material thicknesses - an air gap. This reduces the lifting force of the lifting magnets.

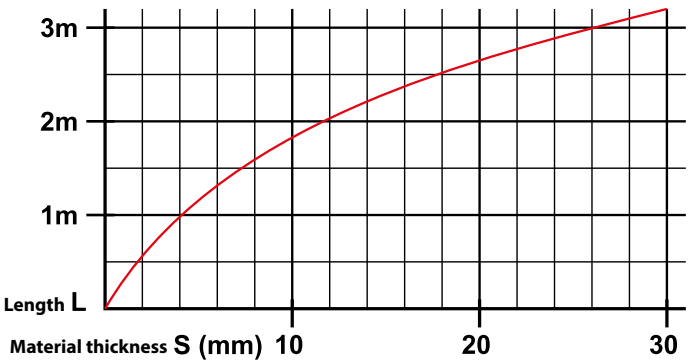

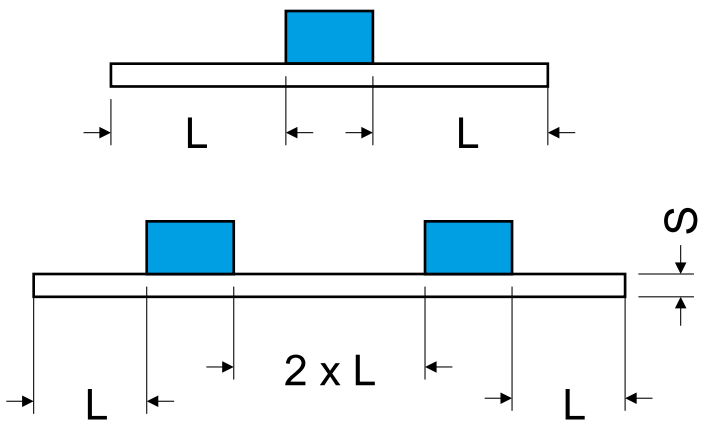

Factors affecting the Holding powers of Lifting magnets

4. Composition of the Load to be lifted
Steel with low carbon content is a good magnetic conductor eg F1110 or St37. Steel alloy with a high carbon content or with other materials such as steel loses its magnetic properties so that the power of the lifting magnets is low. Heat treatments which affect the steel structure also reduce the lifting power. The harder a steel the worse its response to magnets, and it tends to retain a residual magnetism. The nominal power of our lifting magnets is valid for a steel with low carbon content, such as C 40 / St37.

Material	Lifting power (%)
Carbon Steel 0,1 - 0,3 % C ST37/52	100
Carbon Steel 0,4 - 0,5 % C	90
Alloy Steel 2312/2379...	80 - 90
cast iron GGG	70 - 80
cast iron GG	45 - 60
Alloy Steel hardened at 55-60 HRc	40 - 50
Stainless Steel	0
Brass, Aluminum, Copper	0

5. Temperature of the Load to be lifted
The higher the temperature the faster the molecules vibrate the steel. Quick vibrating molecules provide the magnetic flux higher resistance. Our data apply to max. 80°C.

In almost the same way, the factors making 1,2,4,5 also noticeable in the magnetic clamping.

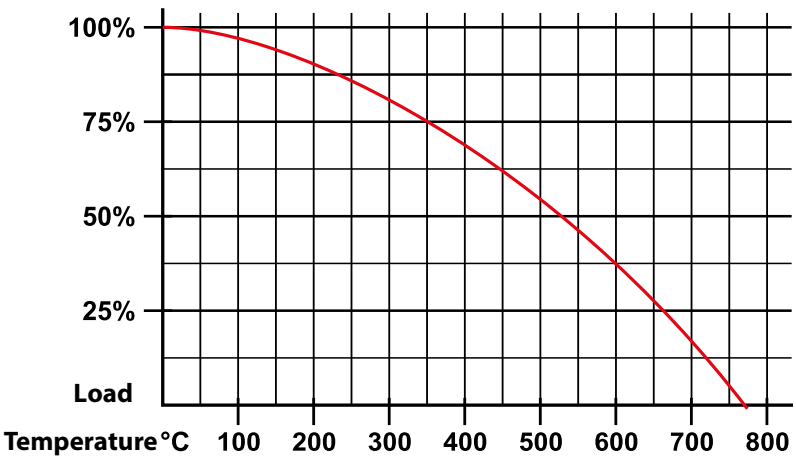

FX Force / Load / Air gap

FX 150	Air gap < 0,1mm			Air gap 0,1 - 0,3 mm			Air gap 0,3 - 0,5 mm		
Material thickness (mm)	Max. Load (kg)	Max. L (mm)	Max. W (mm)	Max. Load (kg)	Max. L (mm)	Max. W (mm)	Max. Load (kg)	Max. L (mm)	Max. W (mm)
>= 2	20	800	800	12	800	800	10	800	800
>= 4	60	1500	1000	40	1500	1000	30	1200	1000
>= 6	80	1500	1000	60	1500	1000	50	1200	1000
>= 8	150	1500	1000	120	1500	1000	80	1200	1000
Ø50-200	75	1500	1000	50	2000	-	40	1500	-

FX 300	Air gap < 0,2mm			Air gap 0,2 - 0,3 mm			Air gap 0,3 - 0,6 mm		
Material thickness (mm)	Max. Load (kg)	Max. L (mm)	Max. W (mm)	Max. Load (kg)	Max. L (mm)	Max. W (mm)	Max. Load (kg)	Max. L (mm)	Max. W (mm)
>= 4	60	1600	1000	50	1500	1000	40	1250	1000
>= 8	200	2000	1250	160	2000	1250	120	1500	1000
>= 10	230	2250	1250	190	2000	1250	150	1500	1000
>= 15	300	2500	1250	250	2000	1250	200	1500	1000
Ø50-300	150	3000	-	125	2500	-	100	2000	-

FX 600	Air gap < 0,2mm			Air gap 0,2 - 0,3 mm			Air gap 0,3 - 0,6 mm		
Material thickness (mm)	Max. Load (kg)	Max. L (mm)	Max. W (mm)	Max. Load (kg)	Max. L (mm)	Max. W (mm)	Max. Load (kg)	Max. L (mm)	Max. W (mm)
>= 6	150	1800	1500	120	1800	1250	100	1500	1250
>= 10	300	2250	1500	250	2250	1250	210	2000	1250
>= 15	500	2500	1500	440	2500	1250	350	2000	1250
>= 20	600	3000	1500	520	3000	1250	440	2500	1250
Ø80-400	300	4000	-	250	3500	-	200	3000	-

FX 800	Air gap < 0,2mm			Air gap 0,2 - 0,3 mm			Air gap 0,3 - 0,6 mm		
Material thickness (mm)	Max. Load (kg)	Max. L (mm)	Max. W (mm)	Max. Load (kg)	Max. L (mm)	Max. W (mm)	Max. Load (kg)	Max. L (mm)	Max. W (mm)
>= 6	200	1800	1500	160	1800	1500	140	1500	1500
>= 10	400	2250	2000	320	2250	2000	280	2000	1500
>= 15	650	2500	2000	520	2500	2000	450	2000	1500
>= 20	800	3000	2000	720	3000	2000	550	2500	1500
Ø80-400	400	5000	-	320	4500	-	250	3500	-

FX 1000	Air gap < 0,3mm			Air gap 0,3 - 0,5 mm			Air gap 0,5 - 0,6 mm		
Material thickness (mm)	Max. Load (kg)	Max. L (mm)	Max. W (mm)	Max. Load (kg)	Max. L (mm)	Max. W (mm)	Max. Load (kg)	Max. L (mm)	Max. W (mm)
>= 10	350	2250	1500	300	2250	1500	260	2250	1250
>= 15	600	2500	1500	500	2500	1500	450	2500	1250
>= 20	900	3000	1500	750	3000	1500	675	3000	1250
>= 25	1000	3500	1500	850	3000	1500	750	3000	1250
Ø100-450	500	4500	-	400	4000	-	330	3000	-

FX 1500	Air gap < 0,3mm			Air gap 0,3 - 0,5 mm			Air gap 0,5 - 0,6 mm		
Material thickness (mm)	Max. Load (kg)	Max. L (mm)	Max. W (mm)	Max. Load (kg)	Max. L (mm)	Max. W (mm)	Max. Load (kg)	Max. L (mm)	Max. W (mm)
>= 10	525	2250	2000	450	2250	2000	400	2250	1500
>= 15	900	2500	2000	750	2500	2000	700	2500	1500
>= 20	1300	3000	2500	1100	3000	2500	1000	3000	2000
>= 25	1500	3500	2500	1250	3500	2500	1100	3000	2000
Ø100-450	750	5000	-	600	4500	-	450	3500	-

FX 2000	Air gap < 0,3mm			Air gap 0,3 - 0,6 mm			Air gap 0,6 - 0,8 mm		
Material thickness (mm)	Max. Load (kg)	Max. L (mm)	Max. W (mm)	Max. Load (kg)	Max. L (mm)	Max. W (mm)	Max. Load (kg)	Max. L (mm)	Max. W (mm)
>= 15	500	2500	2000	400	3000	2000	330	2500	1500
>= 25	1200	3000	2000	950	3000	2000	800	3000	1500
>= 40	1600	2500	2000	1300	3000	2000	1100	3000	1500
>= 50	2000	4000	2000	1600	3000	2000	1300	3000	1500
Ø120-600	1000	4500	-	800	4000	-	650	3500	-

FX 3000	Air gap < 0,3mm			Air gap 0,3 - 0,6 mm			Air gap 0,6 - 0,8 mm		
Material thickness (mm)	Max. Load (kg)	Max. L (mm)	Max. W (mm)	Max. Load (kg)	Max. L (mm)	Max. W (mm)	Max. Load (kg)	Max. L (mm)	Max. W (mm)
>= 15	750	2500	2500	600	3000	2500	500	2500	2000
>= 25	1800	3000	2500	1400	3000	2500	1200	3000	2000
>= 40	2400	3500	2500	2000	3000	2500	1600	3000	2000
>= 50	3000	4000	2500	2400	3000	2500	2000	3000	2000
Ø120-600	1500	5000	-	1200	5000	-	1000	4000	-

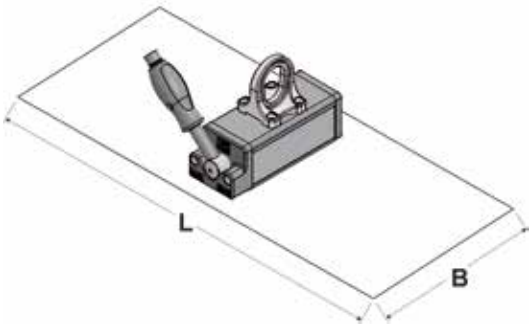

FX-R Force / Load / Air gap

FX-R100	Air gap < 0,1mm			Air gap 0,1 - 0,3 mm			Air gap 0,3 - 0,5 mm		
Material thickness (mm)	Max. Load (kg)	Max. L (mm)	Max. W (mm)	Max. Load (kg)	Max. L (mm)	Max. W (mm)	Max. Load (kg)	Max. L (mm)	Max. W (mm)
>= 2	25	800	800	12	800	800	10	800	800
>= 4	50	1500	1000	40	1500	1000	30	1200	1000
>= 6	70	1500	1000	60	1500	1000	45	1200	1000
>= 8	100	1500	1000	75	1500	1000	60	1200	1000
Ø25-150	100	2000	-	75	2000	-	60	1500	-

FX-R225	Air gap < 0,2mm			Air gap 0,2 - 0,3 mm			Air gap 0,3 - 0,6 mm		
Material thickness (mm)	Max. Load (kg)	Max. L (mm)	Max. W (mm)	Max. Load (kg)	Max. L (mm)	Max. W (mm)	Max. Load (kg)	Max. L (mm)	Max. W (mm)
>= 4	80	1600	1000	60	1500	1000	40	1250	1000
>= 8	180	2000	1250	150	2000	1250	120	1500	1250
>= 10	225	2250	1250	200	2000	1250	150	1500	1250
Ø50-205	225	3000	-	200	2500	-	150	2000	-

FX-R450	Air gap < 0,2mm			Air gap 0,2 - 0,3 mm			Air gap 0,3 - 0,6 mm		
Material thickness (mm)	Max. Load (kg)	Max. L (mm)	Max. W (mm)	Max. Load (kg)	Max. L (mm)	Max. W (mm)	Max. Load (kg)	Max. L (mm)	Max. W (mm)
>= 6	150	1800	1500	120	1800	1000	100	1500	1250
>= 10	300	2250	1500	250	2250	1250	210	2000	1250
>= 15	400	2500	1500	350	2500	1250	300	2000	1250
>= 20	450	3000	1500	400	3000	1250	350	2500	1250
Ø50-270	450	4000	-	375	3500	-	280	3000	-

FX-R750	Air gap < 0,3mm			Air gap 0,3 - 0,5 mm			Air gap 0,5 - 0,6 mm		
Material thickness (mm)	Max. Load (kg)	Max. L (mm)	Max. W (mm)	Max. Load (kg)	Max. L (mm)	Max. W (mm)	Max. Load (kg)	Max. L (mm)	Max. W (mm)
>= 8	300	2250	1500	280	2250	1500	250	2250	1250
>= 10	400	2500	1500	380	2500	1500	300	2500	1250
>= 15	700	3000	1500	680	3000	1500	550	3000	1250
>= 20	750	3500	1500	720	3000	1500	600	3000	1250
Ø70-370	750	4500	-	600	4000	-	450	3000	-

FX-R1200	Air gap < 0,3mm			Air gap 0,3 - 0,6 mm			Air gap 0,6 - 0,8 mm		
Material thickness (mm)	Max. Load (kg)	Max. L (mm)	Max. W (mm)	Max. Load (kg)	Max. L (mm)	Max. W (mm)	Max. Load (kg)	Max. L (mm)	Max. W (mm)
>= 15	600	2500	2000	500	3000	2000	440	2500	1500
>= 20	800	3000	2000	650	3000	2000	550	3000	1500
>= 25	1000	3500	2000	800	3000	2000	700	3000	1500
>=40	1200	4000	2000	1000	3000	2000	900	3000	1500
Ø120-560	1200	4500	-	900	4000	-	700	3500	-

FX-R1800	Air gap < 0,3mm			Air gap 0,3 - 0,6 mm			Air gap 0,6 - 0,8 mm		
Material thickness (mm)	Max. Load (kg)	Max. L (mm)	Max. W (mm)	Max. Load (kg)	Max. L (mm)	Max. W (mm)	Max. Load (kg)	Max. L (mm)	Max. W (mm)
>= 15	900	2500	2000	750	3000	2000	660	2500	1500
>= 20	1200	3000	2000	1000	3000	2000	825	3000	1500
>= 25	1500	3500	2000	1200	3000	2000	1050	3000	1500
>= 40	1800	4000	2000	1500	3000	2000	1200	3000	1500
Ø120-560	1800	5000	-	1500	4000	-	1125	3500	-

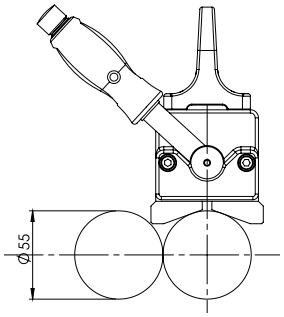

FX-R100

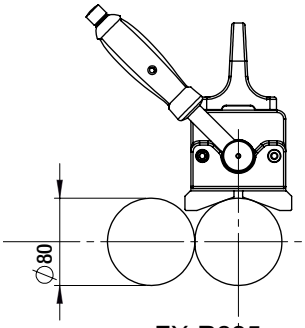

FX-R225

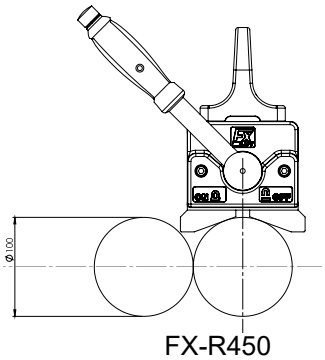

FX-R450

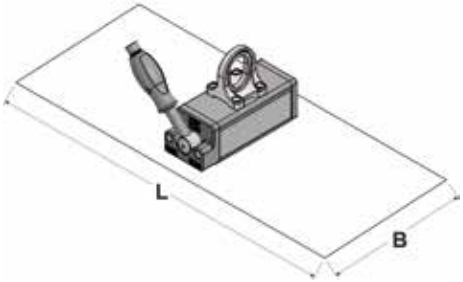

FX-P Force / Load / Air gap

FX-P170	Air gap < 0,1mm			Air gap 0,1 - 0,3 mm			Air gap 0,3 - 0,5 mm		
Material thickness (mm)	Max. Load (kg)	Max. L (mm)	Max. W (mm)	Max. Load (kg)	Max. L (mm)	Max. W (mm)	Max. Load (kg)	Max. L (mm)	Max. W (mm)
>= 2	30	800	800	20	800	800	15	800	800
>= 4	80	1500	1250	60	1500	1250	50	1200	1250
>= 6	120	1500	1250	90	1500	1250	75	1200	1250
>= 8	170	1500	1250	130	1500	1250	100	1200	1250
Ø30-105	150	2000	-	115	2000	-	60	1500	-

FX-P330	Air gap < 0,2mm			Air gap 0,2 - 0,3 mm			Air gap 0,3 - 0,6 mm		
Material thickness (mm)	Max. Load (kg)	Max. L (mm)	Max. W (mm)	Max. Load (kg)	Max. L (mm)	Max. W (mm)	Max. Load (kg)	Max. L (mm)	Max. W (mm)
>= 4	100	2000	1250	80	1500	1250	60	1250	1250
>= 6	160	2500	1500	130	2000	1500	100	1500	1500
>= 8	300	2500	1500	240	2000	1500	180	1500	1500
>= 10	330	2500	1500	270	2000	1500	200	1500	1500
Ø40-160	300	3500	-	250	3000	-	180	2500	-

FX-P650	Air gap < 0,2mm			Air gap 0,2 - 0,3 mm			Air gap 0,3 - 0,6 mm		
Material thickness (mm)	Max. Load (kg)	Max. L (mm)	Max. W (mm)	Max. Load (kg)	Max. L (mm)	Max. W (mm)	Max. Load (kg)	Max. L (mm)	Max. W (mm)
>= 4	160	2250	1500	130	2000	1500	110	2000	1500
>= 6	200	2500	1500	175	2250	1500	140	2250	1500
>= 8	450	3000	1500	400	3000	1500	320	2500	1500
>= 10	550	2500	1500	500	3000	1500	400	2500	1500
>= 20	650	3000	1500	570	3000	1500	450	2500	1500
Ø60-210	550	4000	-	480	3500	-	400	3000	-

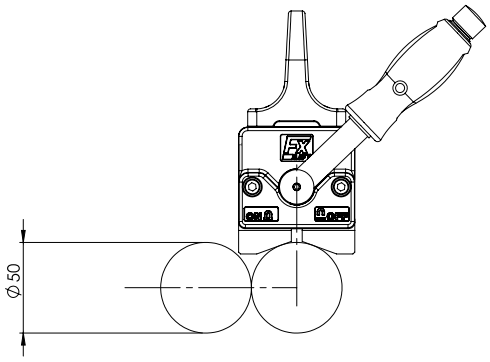

FX-P170

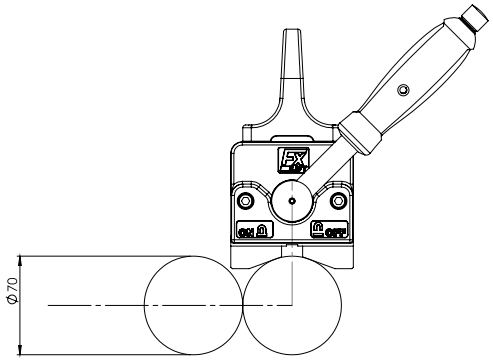

FX-P330

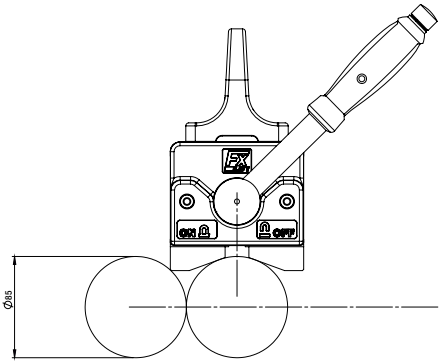

FX-P650

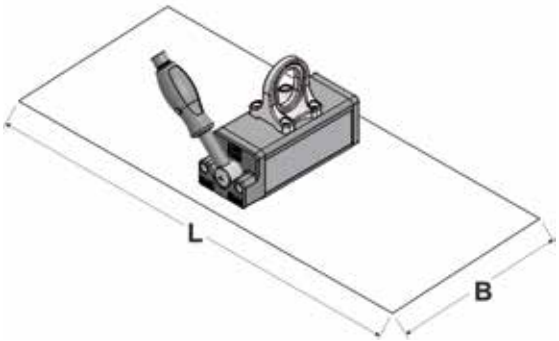

FX-VV Force / Load / Air gap

FX-VV200	Air gap < 0,1mm			Air gap 0,1 - 0,3 mm			Air gap 0,3 - 0,5 mm		
Material thickness (mm)	Max. Load (kg)	Max. L (mm)	Max. W (mm)	Max. Load (kg)	Max. L (mm)	Max. W (mm)	Max. Load (kg)	Max. L (mm)	Max. W (mm)
>= 4	70	1500	1250	50	1500	1250	35	1000	1250
>= 6	110	2000	1250	75	1500	1250	60	1250	1250
>= 8	175	2500	1250	120	2000	1250	90	2000	1250
>= 10	200	2500	1250	140	2000	1250	110	2000	1250
90° ∨	100	3000	-	80	2500	-	60	2000	-
90° ∧	120	3000	-	100	2500	-	60	2000	-

FX-VV400	Air gap < 0,2mm			Air gap 0,2 - 0,3 mm			Air gap 0,3 - 0,6 mm		
Material thickness (mm)	Max. Load (kg)	Max. L (mm)	Max. W (mm)	Max. Load (kg)	Max. L (mm)	Max. W (mm)	Max. Load (kg)	Max. L (mm)	Max. W (mm)
>= 6	150	2000	1000	110	1500	1000	75	1250	1000
>= 8	280	2500	1250	210	2250	1250	150	2000	1250
>= 10	350	2500	1250	260	2250	1250	180	2000	1250
>= 15	400	2500	1250	290	2250	1250	220	2000	1250
90° ∨	200	4000	-	160	3500	-	120	3200	-
90° ∧	250	4000	-	190	3500	-	130	3200	-

FX-VV800	Air gap < 0,2mm			Air gap 0,2 - 0,3 mm			Air gap 0,3 - 0,6 mm		
Material thickness (mm)	Max. Load (kg)	Max. L (mm)	Max. W (mm)	Max. Load (kg)	Max. L (mm)	Max. W (mm)	Max. Load (kg)	Max. L (mm)	Max. W (mm)
>= 4	130	2000	1500	100	2000	1500	90	2000	1500
>= 6	200	2500	1500	160	2250	1500	130	2250	1500
>= 8	400	3000	1500	320	3000	1500	270	2500	1500
>= 15	650	3000	1500	520	3000	1500	420	2500	1500
>= 20	800	3000	1500	650	3000	1500	550	2500	1500
90° ∨	300	5000	-	240	4500	-	200	4000	-
90° ∧	400	5000	-	320	4500	-	300	4000	-

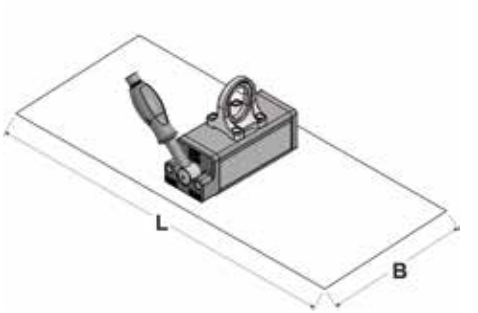

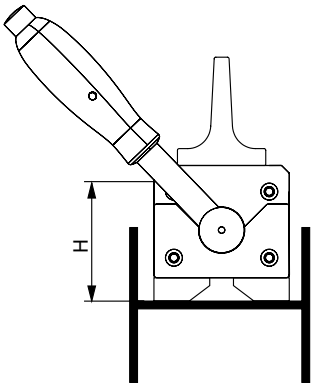

150°C/100%

FX-VV	H2 (mm)	IPE	HEB
FX-VV 200	65	from IPE 80	from HEB 100
FX-VV 400	87	from IPE 100	from HEB 120
FX-VV 800	106	from IPE 140	from HEB 160

MBX Magnetic Clamping Blocks

MBX magnetic clamping blocks have opposite clamping sides that are activated when actuated. They are designed to clamp workpieces on steel surfaces such as machine or assembly tables.
Several MBX can also be connected to each other via the internal hexagon of the switching shaft in order to clamp longer or larger workpieces.The activation takes place via the removable switching key with only 90° switching travel, the surfaces of the MBX are completely nickel-plated.

With the two differently shaped clamping sides of the MBX, almost any workpiece geometry can be held, regardless of whether round material, sheets or even profiles are to be clamped.

The MBX magnetic clamping block clamps to the table and clamps the workpiece

MBX are the ideal clamping device for clamping workpieces for drilling, deburring, welding or thread cutting on welding or deburring tables quickly, flexibly and without interfering contours.

Suitable for drilling, grinding, welding...
also vertical

Suitable for angle material

Suitable for round material

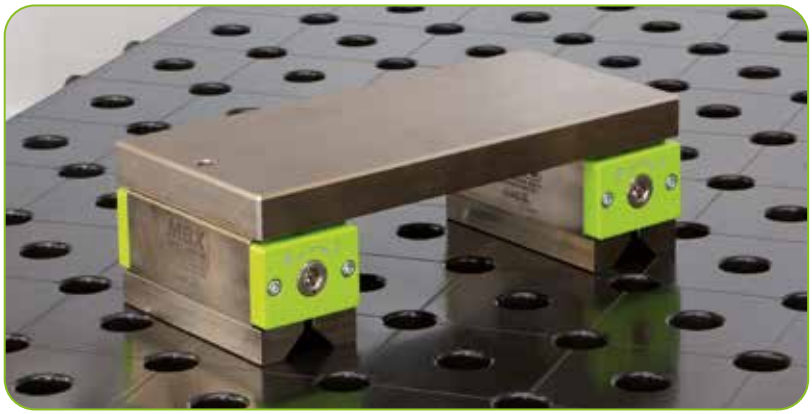

Suitable for flat material

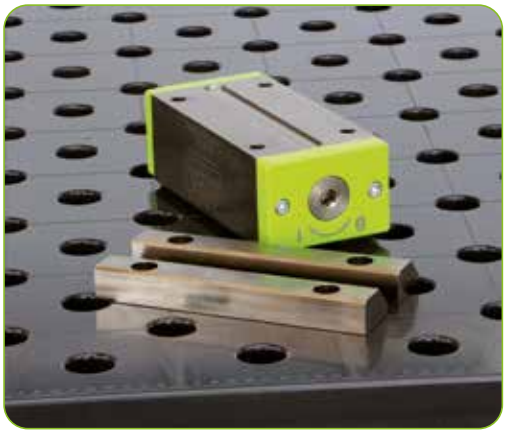

Tip: The 90° pick ledges of the MBX can be replaced with workpiece-specific pick ledges

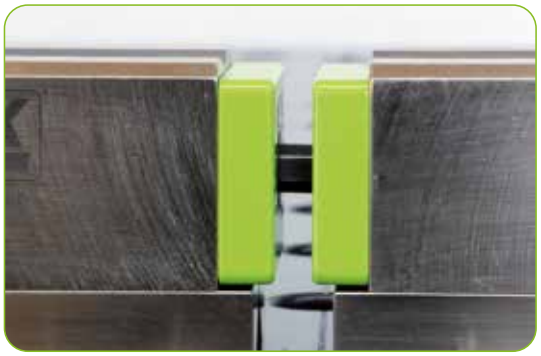

Tip: Several MBXs can be switched simultaneously

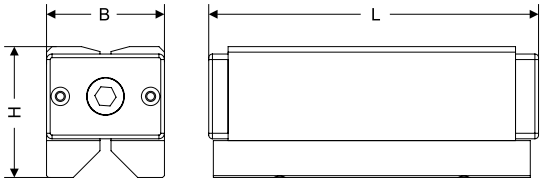

Model	Item-Nr.	Dimensions (mm)			clamping surface 1 (mm) (Flat + Round)	clamping surface 2 (mm) (Flat + 90°)	Holding force (kN)	Weight (kg)
		L	B	H				
MBX 5	3002 005	143	64	71	120 x 57	136 x 64	5	3,9
MBX 5 Pair	3002 005-1	143	64	71	120 x 57	136 x 64	5	2x3,9
MBX 7	3002 007	178	64	71	156 x 57	172 x 64	7	4,9
MBX 7 Pair	3002 007-1	178	64	71	156 x 57	172 x 64	7	2x4,9
MBX 10	3002 010	184	87	88	162 x 76	178 x 87	10	8,8
MBX 10 Pair	3002 010-1	184	87	88	162 x 76	178 x 87	10	2x8,8

MAGNETIC LIFTING

FAST • SUSTAINABLE • SAFE

Valid from July 2024