Threaded Lock Pins • self-locking, with axial bearing

EH 22356.

Product Description

Threaded lock pins are used for quick fastening, locking, adjusting, changing, clamping, connecting and securing. Quickly and easily unlockable for frequently repeated connections. By pressing the button, the threaded segments unlock and the threaded lock pin can be inserted into or removed from a threaded hole. A time-consuming screwing in and out is unnecessary.
The thread lock pin is characterised by the following features and advantages:
- corrosion-protected
- no time-consuming screwing in and unscrewing
- self-locking due to spring force
- with axial bearing

The advantages of the axial bearing:
- Double clamping force with the same grip size by reducing surface friction.
- Protection of the component due to fixed contact surface.
- Low setting behaviour due to higher pretensioning force in the bolt or thread.
- Less force required to release.

Material

Pin part
- Heat-treated steel, tempered, manganese phosphated
- Stainless steel 1.4542, precipitation-hardened

Handle
- Thermoplastic PA 6, black, dull similar to RAL 9005

Press button
- Aluminium, orange, anodised

Threaded element
- Stainless steel 1.4542, precipitation-hardened

Axial bearing
- Steel, nitrided, blackened
- stainless steel

Spring
- Stainless Steel

Assembly

Threaded lock pins can only be mounted into a thread that is true to gauge.

Mounting:
1. Press in the button and hold it down.
2. Insert the threaded lock pin.
3. Release the button (The button must be back in its original position.).
4. Tighten the threaded lock pin by hand as required.
5. It must be ensured that the threaded segments are engaged in the mounting thread.

Dismantling:
1. Unscrew the threaded lock pin approx. a quarter of a turn anticlockwise.
2. Press in the button and hold it down.
3. Remove the threaded lock pin.
4. Release the button.

Operation

The threaded segments are unlocked by pressing the button.

More information

Notes

Special types on request.
Due to the thread geometry, the clamping force is higher with the smaller thread sizes.

Accessories

Can easily be fitted with retaining cable EH 22355.

Further products

- Threaded Lock Pins, self-locking
- Retaining Cables, for threaded lock pin

Drawing

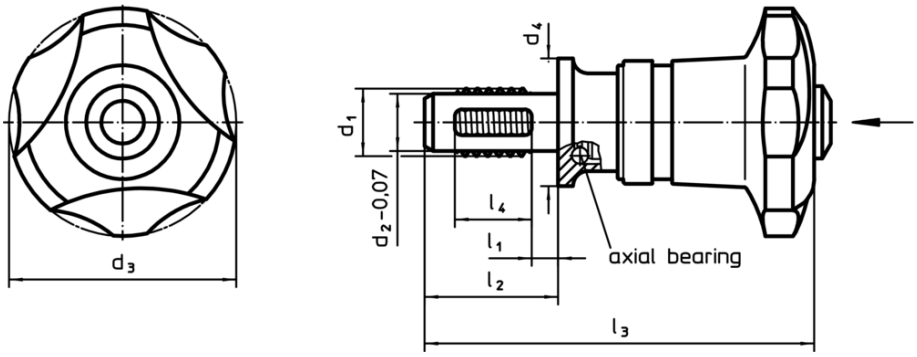

Order information

Dimensions								Locating thread			Tightening torque	Clamping force	Established tightening torque	Clamping force		Shearing resistance, two-shear[3]	Art. No.
d_1	l_1	d_2 -0.07	d_3	d_4	l_2	l_3	l_4		min.	max.	max.	max.	~[1]	~[2]		min.	
[mm]								[mm]	[°C]		[Nm]	[kN]	[Nm]	[kN]	[g]	[kN]	
Heat-treated steel																	
M10	**10**	8.35	40	30	26.0	74.4	10	M10	-30	80	5	4.2	3.5	2.9	100	59.3	22356.0202
M10	**20**	8.35	40	30	36.0	84.4	10	M10	-30	80	5	4.2	3.5	2.9	180	59.3	22356.0204
M10	**30**	8.35	40	30	46.0	94.4	10	M10	-30	80	5	4.2	3.5	2.9	108	59.3	22356.0206
M12	**15**	10.07	40	30	34.0	82.4	12	M12	-30	80	5	3.7	3.5	2.6	184	85.4	22356.0303
M12	**30**	10.07	40	30	49.0	97.4	12	M12	-30	80	5	3.7	3.5	2.6	193	85.4	22356.0306
M12	**50**	10.07	40	30	69.0	117.4	12	M12	-30	80	5	3.7	3.5	2.6	206	85.4	22356.0310
M16	**15**	13.80	40	30	34.0	83.4	12	M16	-30	80	5	3.0	3.5	2.2	134	176.5	22356.0503
M16	**30**	13.80	40	30	49.0	98.4	12	M16	-30	80	5	3.0	3.5	2.2	150	176.5	22356.0506
M16	**50**	13.80	40	30	69.0	118.4	12	M16	-30	80	5	3.0	3.5	2.2	174	176.5	22356.0510
stainless steel																	
M 8	**10**	6.62	40	30	23.8	72.2	8	M 8	-30	80	5	4.8	3.5	3.3	96	36.4	22356.1102
M 8	**20**	6.62	40	30	33.8	82.2	8	M 8	-30	80	5	4.8	3.5	3.3	98	36.4	22356.1104
M 8	**30**	6.62	40	30	43.8	92.2	8	M 8	-30	80	5	4.8	3.5	3.3	101	36.4	22356.1106
M10	**10**	8.35	40	30	26.0	74.4	10	M10	-30	80	5	4.2	3.5	2.9	100	62.5	22356.1202
M10	**20**	8.35	40	30	36.0	84.4	10	M10	-30	80	5	4.2	3.5	2.9	178	62.5	22356.1204
M10	**30**	8.35	40	30	46.0	94.4	10	M10	-30	80	5	4.2	3.5	2.9	182	62.5	22356.1206
M12	**15**	10.07	40	30	34.0	82.4	12	M12	-30	80	5	3.7	3.5	2.6	185	86.8	22356.1303
M12	**30**	10.07	40	30	49.0	97.4	12	M12	-30	80	5	3.7	3.5	2.6	163	86.8	22356.1306
M12	**50**	10.07	40	30	69.0	117.4	12	M12	-30	80	5	3.7	3.5	2.6	204	86.8	22356.1310
M16	**15**	13.80	40	30	34.0	83.4	12	M16	-30	80	5	3.0	3.5	2.2	134	179.4	22356.1503
M16	**30**	13.80	40	30	49.0	98.4	12	M16	-30	80	5	3.0	3.5	2.2	150	179.4	22356.1506
M16	**50**	13.80	40	30	69.0	118.4	12	M16	-30	80	5	3.0	3.5	2.2	174	179.4	22356.1510

[1] Average hand force established in trials.

[2] Average value established in trials.

[3] Shearing resistance similar to DIN 50141; values apply to applications in plugged condition (without applied tightening torque).

Application example

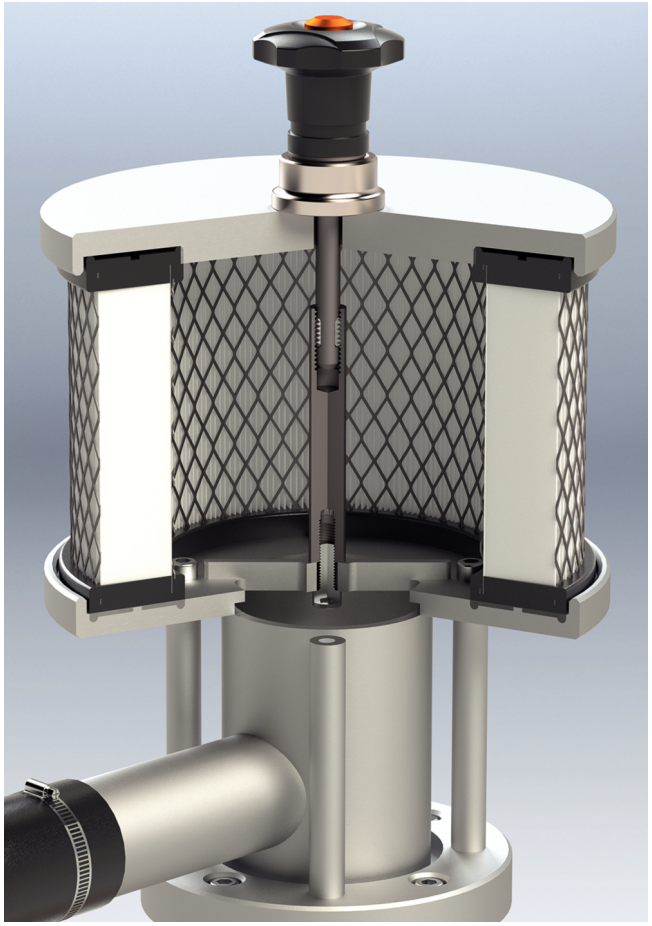

Increase of clamping force with axial bearing (while manual force is unchanged)

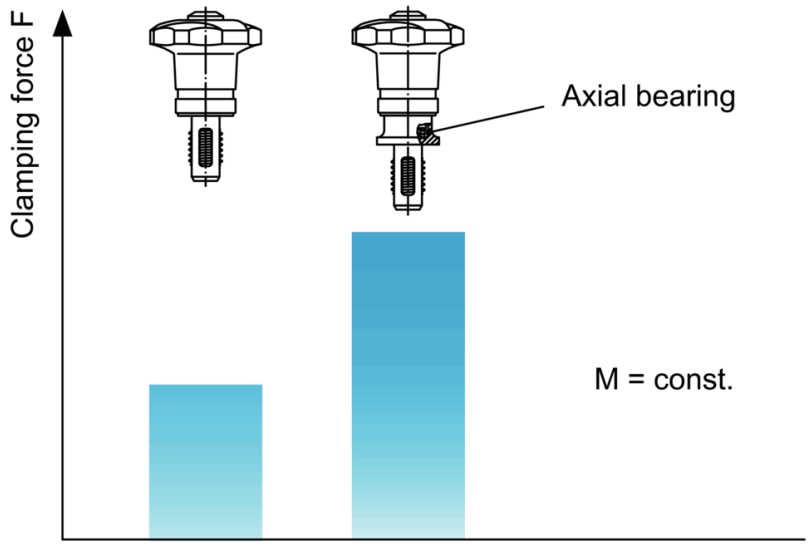

Compliance

RoHS compliant
Contains lead - compliant according to exceptions 6a / 6b / 6c

Contains SVHC substances >0,1% w/w
Contains lead - SVHC list [REACH] as of 10.06.2022

Contains Proposition 65 substances

Lead can cause cancer and reproductive harm from exposure
https://www.P65Warnings.ca.gov/

Free from Conflict Minerals
This product does not contain any substances designated as "conflict minerals" such as tantalum, tin, gold or tungsten from the Democratic Republic of Congo or adjacent countries.