Fixture Clamp, Position Flexible

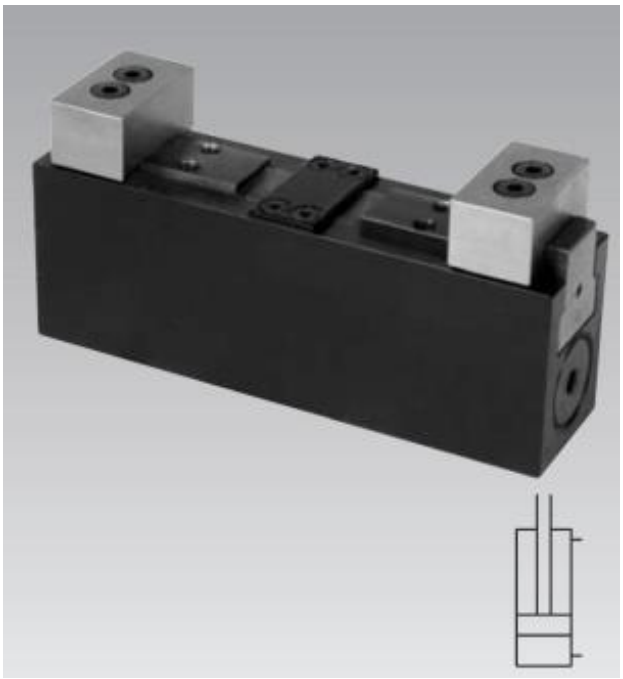

Table of contents

1	Description of the product	1
2	Validity of the documentation	1
3	Target group of this document	1
4	Symbols and signal words	2
5	For your safety	2
6	Application	2
7	Installation	3
8	Start up	6
9	Maintenance	6
10	Trouble shooting	7
11	Technical characteristics	7
12	Storage	8
13	Accessory	8
14	Disposal	8
15	Declaration of manufacture	9

1 Description of the product

Application

Position-flexible fixture clamps can additionally clamp and support a workpiece, which is already positioned and clamped in fixed stops, at unstable workpiece sections.

Due to their compact design they can be arranged in a very limited space.

Fixture clamps are especially suitable for series manufacturing in automated mode.

The double-acting cylinder function combined with central lubrication and good swarf protection guarantees a high process safety.

Description

The fixture clamp with position-flexible clamping function consists of a very slim basic body with 2 integrated hydraulic cylinders. The piston forces are transmitted by two channels to the two clamping slides that can be moved independently from each other. During clamping both clamping slides contact the workpiece nearly without force.

Only after that the clamping pressure and thereby the clamping force increases. Due to wedging of the clamping slides these are protected against displacement. Thereby the workpiece is floatingly held without deformation.

All threads and ports are at the bottom to allow a space-saving arrangement of several clamping points in a very limited space. If fixing from below is not possible an adaptor plate for manifold mounting or tube connection is available.

As accessory also blanks of clamping jaws are available for adaptation to the workpiece contour.

2 Validity of the documentation

This document applies to the following products:

Fixture clamp, position flexible of data sheet I 4.130. The following types or part numbers are concerned:

- 4413 080

3 Target group of this document

- Specialists, fitters and set-up men of machines and installations with hydraulic expert knowledge.

Qualification of the personnel

Expert knowledge means that the personnel must

- be in the position to read and completely understand technical specifications such as circuit diagrams and product-specific drawing documents,
- have expert knowledge (electric, hydraulic, pneumatic knowledge, etc.) of function and design of the corresponding components.

An **expert** is somebody who has due to its professional education and experiences sufficient knowledge and is familiar with the relevant regulations so that he

- can judge the entrusted works,
- can recognize the possible dangers,
- can take the required measures to eliminate dangers,
- knows the acknowledged standards, rules and guidelines of the technology.
- has the required knowledge for repair and mounting.

4 Symbols and signal words

⚠ WARNING

Person damage

Stands for a possibly dangerous situation.
If it is not avoided, death or very severe injuries will result.

⚠ CAUTION

Easy injuries / property damage

Stands for a possibly dangerous situation.
If it is not avoided, minor injuries or material damages will result.

Hazardous to the environment

The symbol stands for important information for the proper handling with materials that are hazardous to the environment.
Ignoring these notes can lead to heavy damages to the environment.

ⓘ Note

This symbol stands for tips for users or especially useful information. This is no signal word for a dangerous or harmful situation.

5 For your safety

5.1 Basic information

The operating instructions serve for information and avoidance of dangers when installing the products into the machine as well as information and references for transport, storage and maintenance.
Only in strict compliance with these operating instructions, accidents and property damages can be avoided as well as trouble-free operation of the products can be guaranteed.
Furthermore, the consideration of the operating instructions will:

- avoid injuries
- reduce down times and repair costs,
- increase the service life of the products.

5.2 Safety instructions

The product was manufactured in accordance with the generally accepted rules of the technology.
Observe the safety instructions and the operating instructions given in this manual, in order to avoid personal damage or material damage.

- Read these operating instructions thoroughly and completely, before you work with the product.
- Keep these operating instructions so that they are accessible to all users at any time.
- Pay attention to the current safety regulations, regulations for accident prevention and environmental protection of the country in which the product will be used.
- Use the ROEMHELD product only in perfect technical condition.
- Observe all notes on the product.
- Use only accessories and spare parts approved by the manufacturer in order to exclude danger to persons because of not suited spare parts.
- Respect the intended use.
- You only may start up the product, when it has been found that the incomplete machine or machine, in which the product shall be mounted, corresponds to the country-specific provisions, safety regulations and standards.
- Perform a risk analysis for the incomplete machine, or the machine.
  Due to the interactions between the product and the machine/fixture or the environment, risks may arise that only can be determined and minimized by the user, e.g. :
  - generated forces,
  - generated movements,
  - Influence of hydraulic and electrical control,
  - etc.

6 Application

6.1 Intended use

The products are used in industrial/commercial applications to transform hydraulic pressure to a movement and /or force.
They must only be operated with hydraulic oil.

In addition, use in compliance with the intended purpose includes:

- Use within the capacity limits specified in the technical data (see data sheet).
- Use as described in this operating manual.
- Compliance with maintenance intervals.
- Qualified and trained personnel for the corresponding activities.
- Mounting of spare parts only with the same specifications as the original part.
- Only HLP hydraulic oils may be used.
- Only clamping jaws may be moved.

6.2 Misapplication

⚠ WARNING

Injuries, material damages or malfunctions!

Modifications can lead to weakening of the components, reduction in strength or malfunctions.

- Do not modify the product!

The use of these products is not permitted:

- For domestic use.
- For the use on fun fairs and in amusement parks.
- In food processing or in areas with special hygiene regulations.
- In mines.
- In ATEX areas (in explosive and aggressive environments. e.g. explosive gases and dusts).
- If chemically acting media damage the seals (seal material durability) or components and thereby functional failure or premature failure could occur.

Special solutions are available on request!

7 Installation

⚠ WARNING

Injury by high-pressure injection (squirting out of hydraulic oil under high pressure)!

Improper connection can lead to escapes of oil under high pressure at the connections.

- Mounting or dismounting of the element must only be made in depressurised mode of the hydraulic system.
- Connection of the hydraulic line as per DIN 3852/ISO 1179.
- Unused connections have to be locked professionally.
- Use all mounting holes.

Injury by high-pressure injection (squirting out of hydraulic oil under high pressure)!

Wear, damage of the seals, ageing and incorrect mounting of the seal kit by the operator can lead to escapes of oil under high pressure.

- Before using them make a visual control.

Poisoning due to contact with hydraulic oil.

Wear, damage of the seals, aging and incorrect mounting of the seal kit by the operator can lead to escapes of oil.
Incorrect connection can lead to escapes of oil at the ports.

- For handling with hydraulic oil consider the material safety data sheet.
- Wear protection equipment.

Injury by dropping parts!

Some products have a heavy weight and can cause injury when dropping.

- Transport products professionally.
- Wear personal protection equipment!

Weight specifications see chapter "Technical characteristics".

ⓘ NOTE

Aggressive cutting fluids

If aggressive cutting fluids and coolants with swarf can penetrate in the area of the clamping jaws of single-acting fixture clamps, this has to be prevented by the customer.

Smooth running

Pay attention to smooth running when mounting!

7.1 Design

The hydraulic force of an internal piston will be transmitted by the slide onto the clamping jaw.

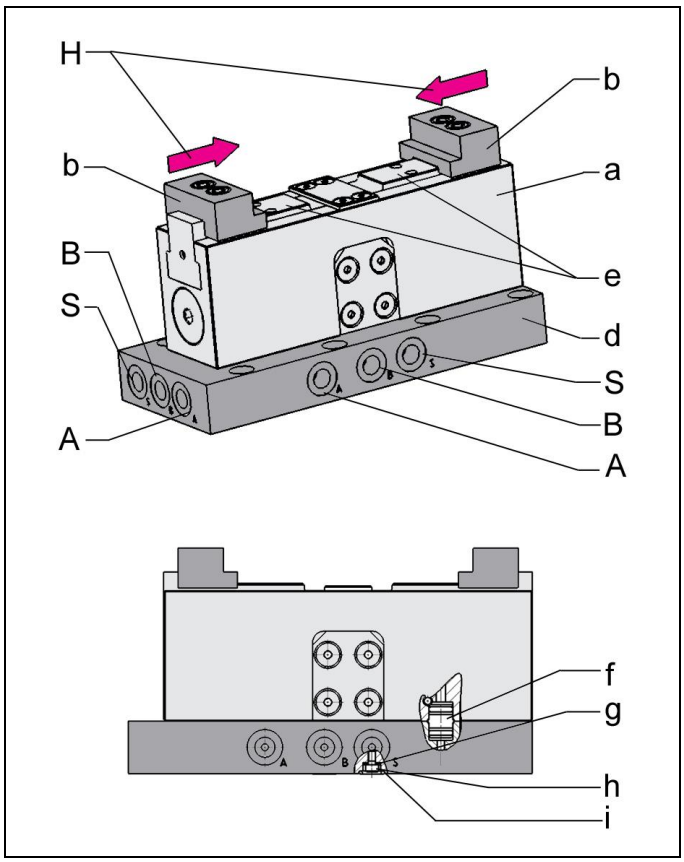

Figure 1: Components

a	Fixture clamp	g	Sealing ring (included in the delivery of the adaptor plate)
b	Clamping jaw with customer's contour (accessory, with machining by the customer)	h	Socket head cap screw (included in the delivery of the adaptor plate)
d	Adaptor plate (accessory)	i	O-ring
e	Clamping slide	A	Clamping
f	Plug connection (included in the delivery of the fixture clamp)	B	Unclamping
		S	Central lubrication
		H	Stroke

7.2 Mounting types

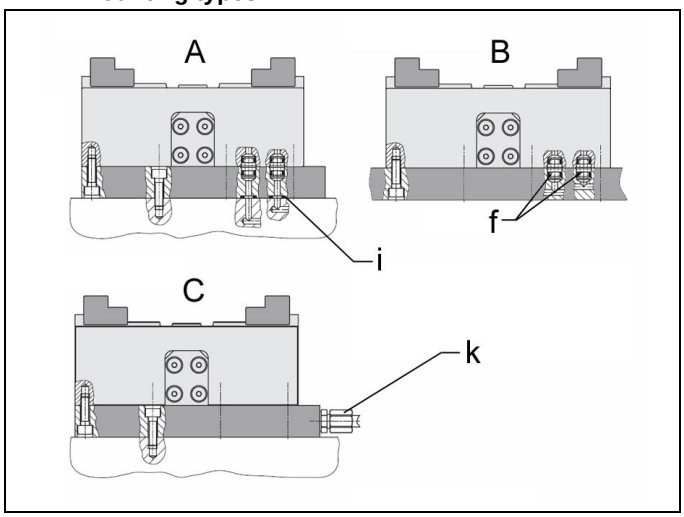

Figure 2: Mounting types

A	Fixation from above with accessory adaptor plate drilled channels	F	Plug-type connector
B	Fixation from below - drilled channels	I	O-ring
C	Pipe thread	k	Tube male stud coupling (accessory)

NOTE

If the fixture clamp is manifold-mounted without adaptor plate, all 5 ports (2xA, 1xB, 2xS) have to be individually connected.

7.3 Marking of the ports

Note

The arrangement of the ports depends on the corresponding product (see chapter Design) and is indicated on the corresponding data sheets.

A	Clamping	S	Central lubrication
B	Unclamping		

7.4 Admissible oil flow rate

⚠ WARNING

Injury due to overload of the element

High-pressure injection (squirting out of hydraulic oil under high pressure) or flying components!

- Due to throttling or closing of ports a pressure intensification can occur.
- Connect the ports professionally!

⚠ CAUTION

Malfunction or early failure

Exceeding the max. flow rate can lead to overload and premature failure of the product..

- The maximum flow rate must not be exceeded!

7.4.1 Calculation of the admissible flow rate

The admissible flow rate or the admissible stroke speed (see chapter Technical characteristics and/or data sheet A 0.100) is valid for the horizontal mounting position in combination with standard add-on parts of the clamping jaw.

In case of other mounting positions and/or add-on parts the flow rate has to be reduced.

If the pump flow rate divided by the number of elements is larger than the admissible flow rate of one element, the flow rate has to be throttled.

This prevents an overload and therewith an early failure.

The flow rate can be checked as follows:

$$Q_{Pumpe} < \frac{\dot{V}_{Zul} * 60 * n}{1000} \quad \text{and/or} \quad Q_{Pumpe} < \frac{v_{Zul} \cdot A_{Kolb} \cdot n}{166{,}67 \cdot 1000}$$

for clamping elements and work supports (indicated on the data sheets)

$$\text{or} \quad v_{max.} < \frac{Q_{Pumpe} \cdot 166{,}67 \cdot 1000}{A_{Kolb} \cdot n}$$

for cylinders (see A 0.100).

With

$\dot{V}_{Zul}$ = Admissible flow rate of the element in [cm³/s]

Q_{Pumpe} = Flow rate of the pump in [l/min]

$v_{Zul} = v_{max.}$ = Admissible stroke speed in [m/s]

A_{Kolb} = Piston area in [cm²]

n = Number of elements

7.4.2 Throttling of the flow rate

The throttling always has to be effected in the supply line to the element. Only thus pressure intensification and thereby pressures exceeding the operating pressure are avoided. The hydraulic circuit diagram shows flow control valves which allow oil return from the element without any impediments.

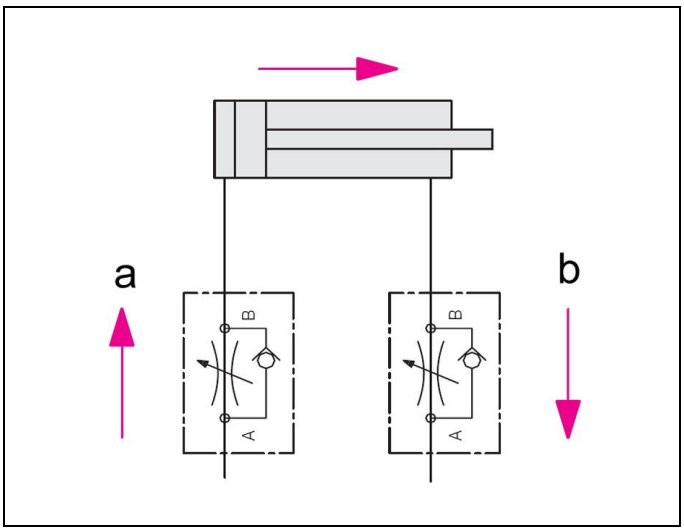

Figure 3: Hydraulic circuit diagram without flow control valves

a	Throttling direction	b	Free flow

If a return-flow throttling is required due to a negative load, it must be guaranteed that the max. operating pressure (see technical characteristics) will not be exceeded.

7.5 Installation of pipe-mounted types

1. Clean the support surfaces.
2. Fix the element at the support surface (see figure "Mounting types).

⚠ WARNING

Product can fall down

Injury by falling products!

- Safety shoes have to be worn to avoid injuries due to falling objects.

⚠ CAUTION

Product not properly tightened

Product can loosen during operation.

- Fix and/or secure with sufficient tightening torque.

NOTE

Determination of the tightening torque

To determine the tightening torque of the fixing screws a screw calculation as per VDI 2230 page 1 has to be effected. The screw material is indicated in the chapter "Technical characteristics".

Proposals and approximate values for the tightening torques see chapter "Technical characteristics".

7.6 Installation of manifold-mounted types

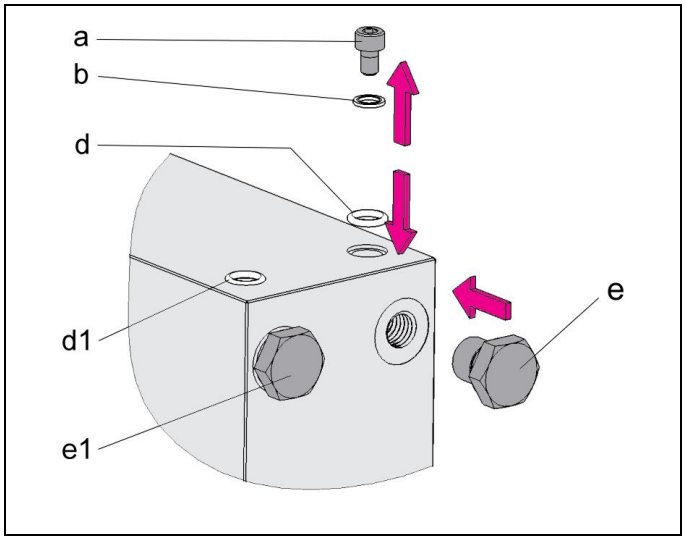

Figure 4: Example of the preparation for hydraulic ports without pipes

NOTE

Arrangement of the ports

- The figure shown is a schematic sketch. The arrangement of the ports depends on the respective product (see chapter Design).

a	Socket head cap screw	d1	Mounted O-ring
b	Sealing ring	e	Screw plug (accessory)
d	O-ring (accessory, according to the version)	e1	Mounted screw plug

1. Drill the holes for hydraulic oil supply and return in the fixture (see also data sheet or installation drawing).
2. Grind or finish mill flange surface (Ra ≤ 0.8 and a flatness of 0.04 mm to 100 x 100 mm. Marks, scratches, shrink holes are not admissible on the surface.)

For some versions:

3a. Remove socket head cap screws and sealing rings. Insert O-rings (accessory, if required).

3b. Seal pipe ports with screw plug (accessory, if required)

4. Clean the support surfaces.
5. Position and fix on the fixture.
6. Install bleeding screws at the upper ends of the piping.

⚠ CAUTION

Product not properly tightened

Product can loosen during operation.

- Fix and/or secure with sufficient tightening torque.

NOTE

Tightening torques

- The tightening torques for the fixing screws have to be designed with reference to the application (e. g. as per VDI 2230).

Proposals and approximate values for the tightening torques see chapter "Technical characteristics".

7.7 Hydraulic connections without pipes by plug-type connectors

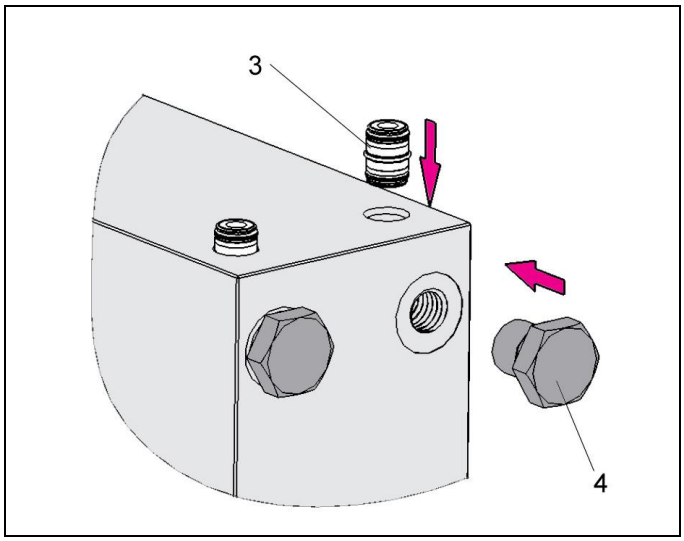

Figure 5: Example of the preparation for hydraulic ports without tubes by plug connection

3	Plug connection (accessory, if required)	4	Screw plug (accessory, if required)

1. Drill the holes for hydraulic oil supply and return in the fixture (see also data sheet).
2. Fabricate fits Ø10H7 for plug connection.
3. Close hydraulic port by means of screw plug.
4. Insert plug connection .
5. Clean the support surfaces.
6. Position and fix on the fixture.

7.8 Connection of the hydraulic equipment

⚠ CAUTION

Work by qualified personnel

- Works only to be effected by authorised personnel.

1. Connect hydraulic lines to qualifying standards and pay attention to scrupulous cleanness (A = Extend, B = Retract)!

NOTE

More details
- See ROEMHELD data sheets A 0.100, F 9.300, F 9.310 and F 9.360.

Screwed Plug
- Use only fittings "screwed plug B and E" as per DIN 3852 (ISO 1179).

Hydraulic connection
- Do not use sealing tape, copper rings or coned fittings.

Pressure fluids
- Use hydraulic oil as per ROEMHELD data sheet A 0.100.

Connection of the hydraulic
Further connection data, plans or similar (e. g. hydraulic, electric circuit diagrams or electrical parameters) see enclosures!

8 Start up

⚠ WARNING

Poisoning due to contact with hydraulic oil.
Wear, damage of the seals, aging and incorrect mounting of the seal kit by the operator can lead to escapes of oil.
Incorrect connection can lead to escapes of oil at the ports.
- For handling with hydraulic oil consider the material safety data sheet.
- Wear protection equipment.

Injury by crushing!
Components of the product make a movement while they are in operation, this can cause injuries.
- Keep parts of the body and items out of the working area!

⚠ CAUTION

Injury due to bursting or malfunction
Exceeding the max. operating pressure (see technical data) can cause the product to burst or malfunction.
- The maximum operating pressure must not be exceeded.
- If necessary, avoid overpressure by using suitable valves.

NOTE

Oil before start
The elements are delivered with minimal lubrication.
Before the start up, lubricate the elements with bed way oil ISO VG 220 - central lubrication!

- Check tight seating (check tightening torque of the fixing screws, see chapter "Technical characteristics").
- Check tight seating of hydraulic connections (check tightening torque of the hydraulic connections, see chapter "Technical characteristics").
- Bleed the hydraulic system.

- Connect to the central lubrication

NOTE

Clamping time
- Without bleeding the clamping time will be considerably prolonged and function problems may occur.

8.1 Central lubrication

The products have a connection to the central lubrication.
We recommend:
1. For lubrication by hand and cycle times > 30 sec
   → Bed way oil ISO VG 220.
2. For automatic lubrication and cycle times <= 30 sec
   → Bed way oil ISO VG 68.

The lubrication pulse or manual lubrication **must be** made in unclamped mode.
For automatic lubrication, we recommend 0.03 cm³ oil per lubrication pulse every 30 min.

For the supply, central lubrication systems (e.g. company SKF) are suitable with piston distributor system (e.g. SKF MonoFkex prelubrication system of the product series 341; marking of the dosing system "2").

Alternatively, a perma FLEX lubrication unit can be used. The lubrication period is freely selectable from 1-12 months.

NOTE

Perma FLEX lubrication unit
The filling with bed way oil can only be carried out by the manufacturer.

8.2 Bleeding of pipe-mounted types

1. Loosen carefully at low pressure union nut of the pipe at the hydraulic ports.
2. Pump until bubble free oil comes out.
3. Fasten union nuts of the pipe.
4. Check tightness.

8.3 Bleeding of manifold-mounted types

1. Loosen carefully the bleeding screws of the fixture at low pressure.
2. Pump until bubble free oil comes out.
3. Fasten the bleeding screws.
4. Check correct function.
5. Check sealing of the hydraulic connections!

9 Maintenance

⚠ WARNING

Burning due to hot surface!
During operation, surface temperatures on the product can exceed 70°C.
- Maintenance and repair work should only be performed in a cooled down condition and/or with protective gloves.

Injury by crushing!
Due to the stored energy, an unexpected start of the product can occur.
- Maintenance works at the product must only be made in depressurised mode!
- Keep hands and other parts of the body out of the working area!

9.1 Plan for maintenance

9.1.1 Regular checks

Maintenance works	Interval	Realisation
Cleaning	As required	Operator
Regular checks	daily	Operator
Regular lubrication	Lubricate after every 100 clamping cycles with lubricating oil and bed way oil ISO VG 220. At the latest after 500 clamping cycles!	⚠ **Caution !** If this lubrication will not be made, this can lead to a failure of the fixture clamp! Operator - central lubrication
Repair		Qualified personnel

9.1.2 Cleaning

⚠ CAUTION

Material damage, damage to moving components

Damage to piston rods, plungers, bolts, etc., as well as wipers and seals can lead to leakage or premature failure!

- Do not use cleaning agents (steel wool or similar) that cause scratches, marks or the like.

Material damage, damage or functional failure

Aggressive cleaning agents can cause damage, especially to seals.
The product must not be cleaned with:

- corrosive or caustic substances or
- organic, solvents such as halogenated or aromatic hydrocarbons and ketones (cellulose thinner, acetone, etc.).

The element must be cleaned at regular intervals. Especially the clamping slide and the housing have to be cleaned of swarf and other liquids.

In the case of heavy contamination, the cleaning has to be made in shorter intervals.

9.1.3 Regular checks

1. Check tightness of hydraulic connections (visual control).
2. Leakage control at the housing and the clamping slide.
3. Clamping force control by pressure control.
4. Check the observance of the maintenance intervals.

9.2 Exchange seal kit

The exchange of the seal kit is made in case of external leakages. For high availability, the seals have to be changed at the latest after 500,000 cycles or 2 years.
The seal kit is available as spare part. An instruction for the exchange of the seal kit is available on request.

ⓘ NOTE

Seal Kits

- Do not install seal kits which were exposed to light for a longer time.
- Pay attention to the storage conditions (see chapter "Technical characteristics").
- Only use original seals.

10 Trouble shooting

Trouble	Cause	Remedy
Clamping slide does not retract:	Clamping pressure is not available or too low	Check at the pressure generator, if pressure is available and high enough (minimum pressure: 10 bar)
Piston rod has too much play:	Guide worn out	Exchange fixture clamp, exchange component, if required
Clamping pressure reduces due to leakages at the fixture clamp:	Wear at the seals	Exchange seals

11 Technical characteristics

ⓘ Note

Only suitable for exterior clamping!

General characteristics

		4413 080	
Clamping force / jaw	[kN]	8.0	
Retention force	[kN]	10.0	
Min. operating pressure	[bar]	25	
Min. unclamping pressure	[bar]	0.5 x clamping pressure	
Clamping stroke	[mm]	2 x 8	
Jaw width	[mm]	40	
Max. flow rate	[ccm/s]	17	
Stroke volume Clamping	[ccm]	8.4	
Stroke volume Unclamping	[ccm]	7.0	
Weight	[kg]	approx. 2.5	

ⓘ NOTE

Flow rate

If required, the two set screws M3 (Ø 0.7) in the ports A can be replaced.

Further information

- For further technical data see ROEMHELD data sheet.

Proposal, tightening torques for screws of tensile strength 8.8, 10.9, 12.9

NOTE

The indicated values are approximate values and have to be interpreted according to the user's application!
See note!

Thread	Tightening torque [Nm]		
	8.8	10.9	12.9
M3	1,3	1,8	2,1
M4	2,9	4,1	4,9
M5	6,0	8,5	10
M6	10	15	18
M8	25	36	45
M10	49	72	84
M12	85	125	145
M14	135	200	235
M16	210	310	365
M20	425	610	710
M24	730	1050	1220
M30	1,450	2100	2450

Note: Valid for workpieces and set screws made of steel with metric thread and connecting surface dimensions as per DIN 912, 931, 933, 934 / ISO 4762, 4014, 4017, 4032
In the table values for tightening torques the following is considered:
Design steel/steel, friction value µges = 0.14 - not oiled, utilisation of the minimum yield point = 90%.

12 Storage

⚠ CAUTION

Damage due to incorrect storage of components

In case of improper storage, the seals can embrittle and resinification of the anti-corrosive oil or corrosion on/in the element can occur.

- Storage in the packaging and moderate environmental conditions.
- The product must not be exposed to direct sunlight, since UV light may cause serious damage to the seals.

The elements are tested by default with mineral oil. The exterior of the elements is treated with a corrosion inhibitor.
The oil film remaining after the test provides for a six-month interior corrosion protection, if stored in dry and uniformly tempered rooms.
For longer storage times, the element has to be filled with a non-resinifying corrosion inhibitor and the outside surfaces must be treated.

13 Accessory

NOTE

Accessories

- See data sheet.

14 Disposal

Hazardous to the environment

Due to possible environmental pollution, the individual components must be disposed only by an authorised expert company.

The individual materials have to be disposed as per the existing regulations and directives as well as the environmental conditions.
Special attention has to be drawn to the disposal of components with residual portions of hydraulic fluids. The instructions for the disposal at the material safety data sheet have to be considered.
For the disposal of electrical and electronic components (e.g. stroke measuring systems, proximity switches, etc.) country-specific legal regulations and specifications have to be kept.

15 Declaration of manufacture

Manufacturer

Römheld GmbH Friedrichshütte
Römheldstraße 1-5
35321 Laubach, Germany
Tel.: +49 (0) 64 05 / 89-0
Fax: +49 (0) 64 05 / 89-211
E-mail: info@roemheld.de
www.roemheld.com

Responsible person for the documentation:
Dipl.-Ing. (FH) Jürgen Niesner, Tel.: +49(0)6405 89-0.

Declaration of manufacture of the products

They are designed and manufactured in line with the relevant versions of the directives **2006/42/EC**(EC MSRL) and in compliance with the valid technical rules and standards.
In accordance with EC-MSRL, these products are components, that are not yet ready for use and are exclusively designed for the installation in a machine, a fixture or a plant.

According to the pressure equipment directives the products are not to be classified as pressure reservoirs but as hydraulic placing devices, since pressure is not the essential factor for the design, but the strength, the inherent stability and solidity with regard to static or dynamic operating stress.

The products may only be put into operation after it was assessed that the incomplete machine / machine, in which the product shall be installed, corresponds to the machinery directives (2006/42/EC).

The manufacturer commits to transmit the special documents of the products to state authorities on request.
The technical documentation as per appendix VII part B was prepared for the products.

Laubach, 02.01.24